Mini hydraulic power pack type A 100 and A 065

Original assembly instructions

Operating pressure p_{max}:	210 bar
Usable volume V_{use}:	0.2 to 0.8 l

B 6025
12-2021-1.1 en

HAWE HYDRAULIK

Printing date / document generated on: 20.12.2021

Table of Contents

1 About these instructions

This manual is part of the product and describes the safe and proper use in all operating phases.

All photos and drawings in this manual show an available product variant. For precise details concerning the variant you have purchased, please refer to the type plate attached to the product.

- ► Read instructions before use.
- ► Make the manual accessible to operating and maintenance personnel at all times.
- ► Keep this manual for the lifetime of the product.
- ► Only pass on the product to third parties together with this manual.

1.1 Target audience

The target audience of this manual is trained and qualified personnel who are familiar with the installation, operation and maintenance of machines.

The manual provides relevant information for the machine manufacturer and machine operator as well as for training courses.

To request further information about the product, contact HAWE Micro Fluid GmbH.

1.2 Safety instructions and symbols

Safety indication

In these instructions, the following warning and safety notes are used:

Symbol	Meaning
⚠ DANGER	Draws your attention to a **hazardous** situation that can lead directly to **serious injury** or **death** if not avoided.
⚠ WARNING	Draws your attention to a **hazardous** situation that can indirectly lead to **serious injury** or **death** if not avoided.
⚠ CAUTION	Draws your attention to a hazardous situation that can indirectly lead to **light** to **moderate** injury if not avoided.
!	**Notice** to prevent environmental and material damage.
i	**Information** to ensure the correct use of the product.

Safety symbols

	General safety symbol Draws your attention to additional safety information.		
	Slipping hazard		Dragging hazard from moving parts
	Harmful substances		Tripping and falling hazard

	Fire accelerants		Falling loads
	Burn hazard		Crushing hazard
	Electrical voltage		Suspended loads
	No access to persons with pacemakers and defibrillators		

Mandatory signs

	Protective equipment
	**Safety boots** Wear appropriate safety boots to protect your feet against mechanical hazards
	**Work gloves** Wear suitable work gloves to protect your hands against chemical and mechanical hazards.
	**Safety goggles** Wear safety goggles to protect your eyes against chemical and mechanical hazards.
	**Protective clothing** ► Wear fitted clothing without protruding parts. ► Follow the safety data sheet of the hydraulic fluid.

1.3 Applicable documents

Standard	Designation
2006/42/EC	
DIN EN 60204-1	Safety of machinery - Electrical equipment of machines - Part 1
ISO 4413	
DIN EN ISO 12100	
DIN 51524	Pressure fluids - Hydraulic oils - Part 1: HL hydraulic oils, Minimum requirements
ISO 4406	
D 6025	Mini hydraulic power pack type A 100 and A 065 data sheet

2 For your safety

The product is built according to the state of the art and recognized safety regulations.

Nevertheless, there is a risk of personal injury and damage to property if this chapter and the safety instructions in this manual are not observed.

2.1 Intended use

- The product is a technical work tool and intended for commercial and industrial use only.
- The product may only be operated in accordance with the technical data, operating conditions and performance limits specified in this manual.
- Only use original accessories and original spare parts approved by the manufacturer.

- The product may only be used indoors.
- The product is primarily used to raise and lower operating tables/robots, window lifters and test benches.

Partly completed machinery
The product is a partly completed machine according to the EC Machinery Directive 2006/42/EC and is intended exclusively for installation in a machine or system. The product is controlled via the manufacturer's machine / plant control.

► Follow the manufacturer's operating instructions.

2.2 Misuse

- Use in other operating modes than specified in the intended use
- Using the product beyond the specified performance limits

- Do not use the product in potentially explosive areas.
- Do not paint over elastic seals, the bearings of moving parts or hose lines.

2.3 Residual risks

When handling hydraulic fluid, comply with the safety data sheet of the manufacturer of the hydraulic fluid.

⚠ DANGER

Hazard from explosive combustion

Hydraulic fluid as well as the mist and vapor of hydraulic fluid are fire accelerants. Contact with ignition sources leads to explosive combustion. Serious injury or death.

► Avoid fire, open flames and smoking in the vicinity of the product.
► Immediately dispose of combustible materials wetted with hydraulic fluid as special waste.
► Do not use flammable or corrosive cleaning fluids.

⚠ WARNING

Electrical and magnetic fields

Electrical and magnetic fields impair the functionality of cardiac pacemakers and implanted defibrillators.

- ► People with pacemakers or implanted defibrillators must maintain a sufficient distance from magnets.
- ► Advise people with pacemakers or implanted defibrillators against approaching magnets.
- ► Cordon off the area around the drive system and affix suitable warning signs to the barriers.

⚠ WARNING

Risk of injury from crushing and shearing

Parts of the body may be crushed or severed between the machine frame and hydraulic system due to lack of caution during transport, assembly and disassembly.

- ► Never reach between the hydraulic system and the machine frame.
- ► Ensure that third parties cannot enter the hazardous area.
- ► Wear work gloves and work boots.

2.4 Duties of the operator

Observe and comply with regulations:

- ► Do not put the product into operation until the complete machine or system complies with the country-specific regulations, safety regulations and standards of the application.
- ► Observe and apply regulations for accident prevention and environmental protection.

Operate product safely:

- ► Despite safety devices, the product still poses residual risks. Observe the safety instructions in this manual to reduce health hazards and avoid dangerous situations.
- ► The operator must ensure that the operating conditions (see general, hydraulic and electrical data) are within the operating limits of the product.
- ► Keep all instructions / signs on the product in legible condition and observe them.

Instruct personnel:

- ► Regularly train the personnel in all points of these instructions and ensure that they are observed.
- ► Ensure the terms of the industrial safety and operating instructions are observed.
- ► Only use qualified personnel. Due to their training and experience, the qualified personnel must be able to recognize risks and avoid possible hazards.

2.5 Qualification of the personnel

The activities described in these instructions require basic knowledge of mechanics, hydraulics and electrics.

For the transport and handling of heavy loads, additional knowledge in handling hoists and slings is required.

- The activities may only be carried out by an appropriate specialist or an instructed person under the supervision of a specialist.
- Activities other than those described in these instructions may only be performed by HAWE or authorized specialist companies.
- The personnel must have read and understood these instructions.

Trained personnel

Personnel instructed comprehensively, by skilled staff on behalf of the owner, in how to perform its appointed tasks and in how to use the product safely.

Specialist personnel

Due to their technical training, knowledge and experience, specialists are able to assess and carry out the assigned work and can independently recognize possible dangers.

Qualified electrician

A person with appropriate professional training, knowledge and experience, so that he/she can recognize and avoid dangers that can be caused by electricity.

Auditor

Persons of a technical inspection body who are authorized to perform testing and monitoring tasks for pressure equipment and electrical systems.

2.6 Personal protective equipment

Personal protective equipment is designed to prevent and reduce hazards.

In the instructions, safety instructions with mandatory symbols indicate the wearing of special protective equipment for special activities.

Instruction and supply is carried out by the operator.

3 About this product

3.1 Markings

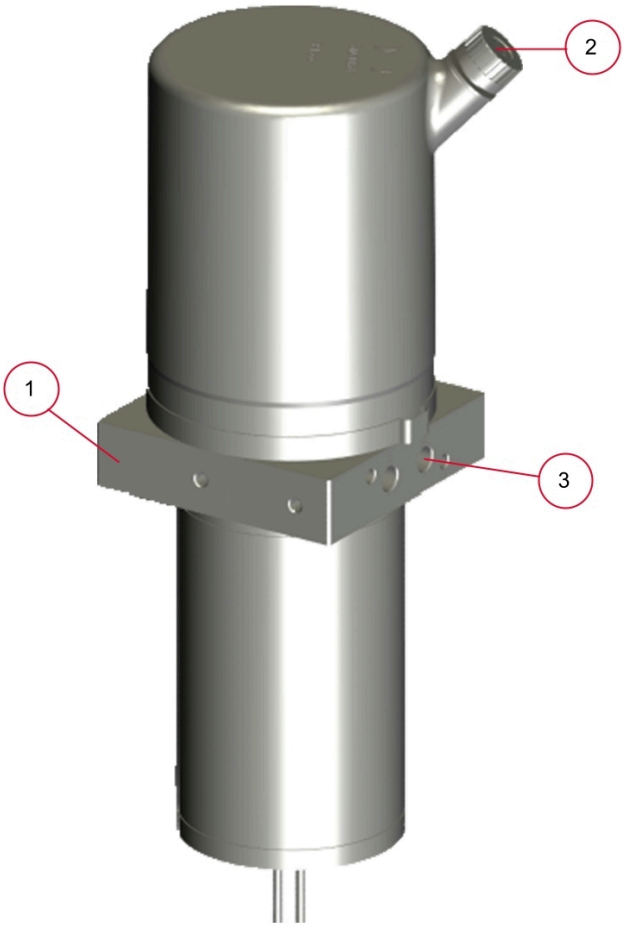

(1) Type plate

The type plate can be found on the equipment rack with the following information:

- Material number (6XX-XXXX-X)
- Serial number
- Production date (week, year)

(2) Hydraulic fluid inlet (oil)

(3) Engravings for hydraulic connections (P / T)

3.2 Structure

This hydraulic power pack is a hydraulically driven motor-pump unit with electric drive. It can be connected to different consumers via the hydraulic interfaces P and T.

The hydraulic power pack is mainly used to generate pressure in a small installation space, such as for actuating (operating) tables/robots, mobile working platforms or window lifters.

It is designed in the versions Q (one flow direction), and H (the lifting version), and it provides a flow rate and pressure in accordance with the technical data. Here, the size of the tank, pump and motor can be varied, along with the motor type.

A 065

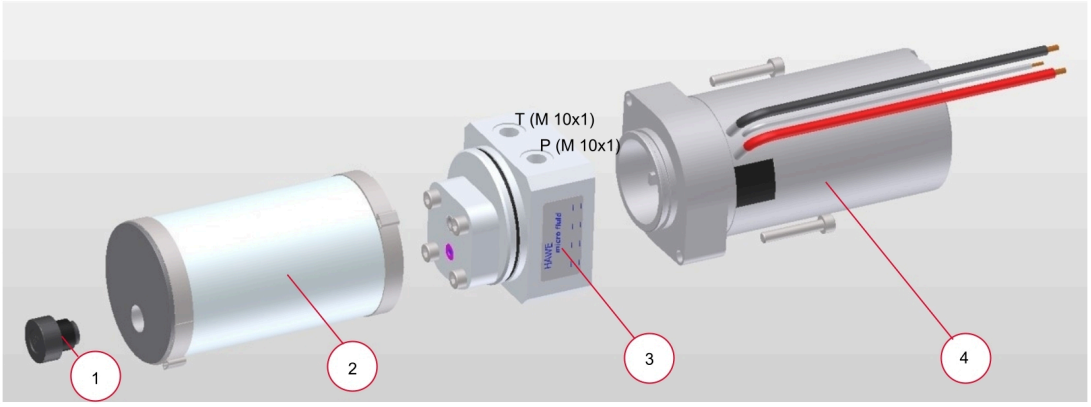

1 Hydraulic fluid filler plug (M 14x1.5)
2 Tank
3 Equipment rack with pump and pressure-limiting valve
4 Motor

A 100 H

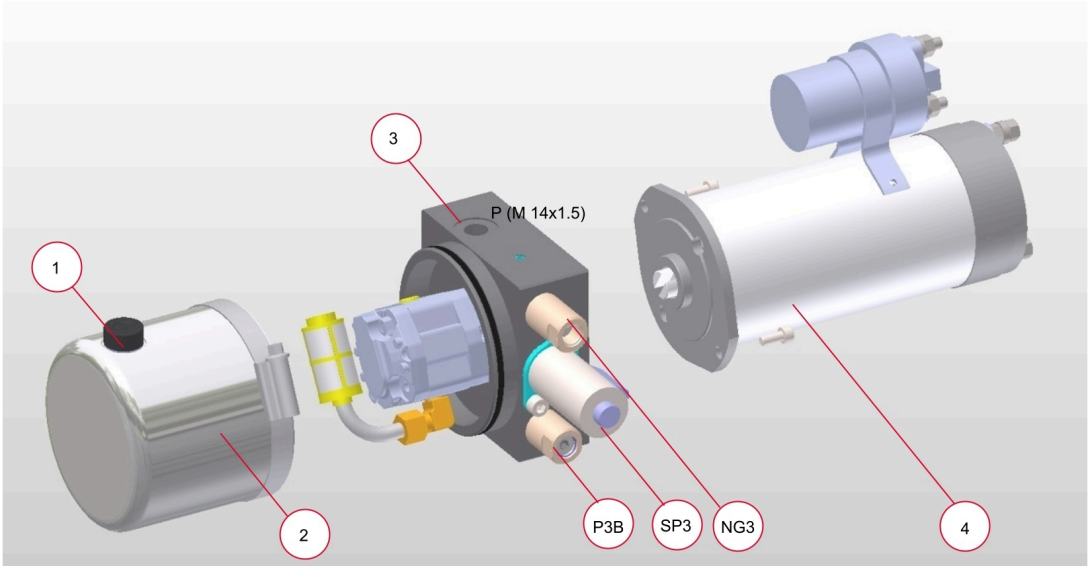

1 Hydraulic fluid filler plug (M 14x1.5)
2 Tank
3 Equipment rack with

- pump
- pressure limiter P3B
- seated valve SP3 and
- throttle NG3

4 Motor

A 100 Q

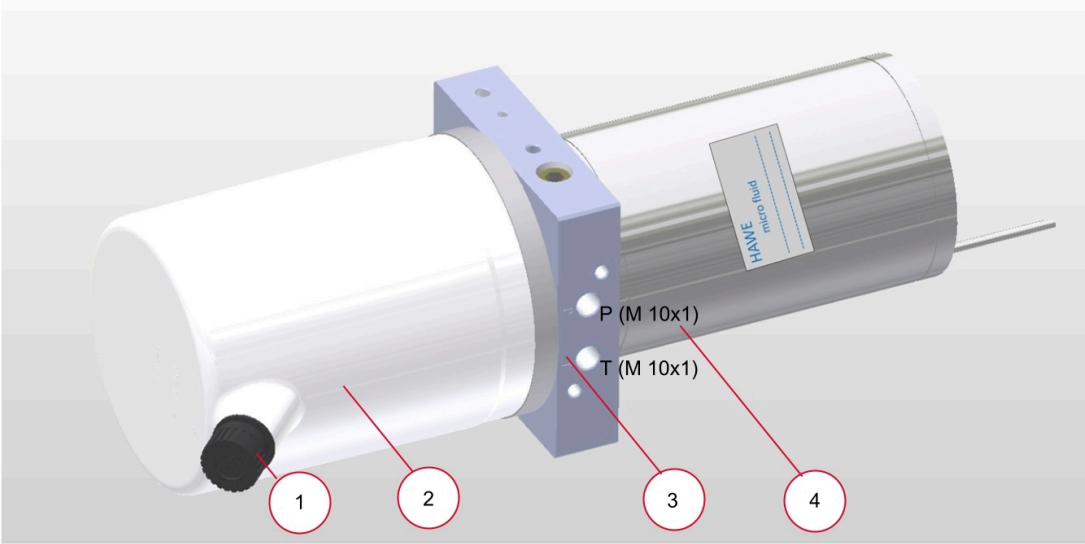

1 Hydraulic fluid filler plug (M14 x 1.5)
2 Tank
3 Equipment rack with
- pump
- check and pressure-limiting valve

4 Motor

The external gear pump is directly flange-mounted via specific equipment rack/Q or H on the motor. The condition and quality of the hydraulic fluid can be easily checked via the plastic cover on the hydraulic tank.

Depending on the version of the mini hydraulic power pack, the 2/2-directional seated valve SP3 (lowering valve) and throttle are integrated in the equipment rack.

3.3 Functions

Version Q

	Motor (M)
Pressure at connection P: Energize the electric drive so there is pressure at connecting line P. The hydraulic fluid flows with a constant flow rate from the hydraulic tank via the consumer port/hydraulic connection P to T.	ON
Releasing pressure: The electric drive is not energized. The hydraulic fluid is not conveyed from the tank.	OFF

Lifting version H

	Motor (M)	Valve (QM)
Pressure at connection P: Energize the electric drive so there is pressure at connecting line A. The hydraulic fluid flows with a constant flow rate from the hydraulic tank via the pump to the consumer port/hydraulic connection P.	ON	CLOSED

	Motor (M)	Valve (QM)
Releasing pressure: The electric drive is not energized. The hydraulic fluid is not conveyed from the tank. If the 2/2-directional seated valve SP3 (QM) is open simultaneously, the hydraulic fluid flows back into the tank.	OFF	OPEN
Maintaining pressure: The electric drive is not energized. Closed seated valve (QM) ensures that the pressure is maintained.	OFF	CLOSED

3.4 Control

The product is preassembled and tested for installation in the higher-level machine. Hydraulic fluid is not included in the scope of delivery.

All of the necessary safety equipment, safety functions and the safety controller should be provided by the machine manufacturer.

Ensure the following at the machine.

- Faults on the hydraulic power pack cannot trigger any hazard and can be safely rectified.
- There is no hazard from failure of the electric power supply to the hydraulic power pack.
- People cannot reach into the hazard zone of the hydraulic power pack.
- People cannot burn themselves on the hot surfaces. After installing the hydraulic power pack in the machine, label any hot surfaces that could pose a danger to people.
- Choose a suitable hydraulic fluid (mineral oil according to DIN 51524) and document this on the type plate.

Operating modes and vibration measurement

- Operating modes & vibration measurement
- The machine manufacturer must determine the operating modes for safe operation of the hydraulic locking unit in the system.

Central control system and software

- A main switch and emergency stop function are integrated in the machine/higher-level control.
- The pressure-limiting valve (P3B) is factory-set and safeguards the hydraulic system against excessive pressure.
- The motor's duty cycle should be monitored by the device control. An increase in the duty cycle is an indicator of abnormal internal leakage.

4 Transport and storage

Observe the following safety instructions additionally to the safety instructions in chapter For your safety.

⚠ CAUTION

Personal injury from tipping and falling loads

The pallet or skeleton container may tip and/or fall during transport. Hands and feet can be crushed.

- Adhere to the symbols on the packaging.
- Carefully transport the pallets or skeleton containers as near as possible to the installation location using approved transport equipment.
- Select transport equipment that has the capacity to transport the maximum load safely.
- Wear protective clothing.

4.1 Transport equipment

Only tested and approved aids are permitted for use.

DAMAGE

Preventing damage in transit

- Do not subject valves or other assembled components to any loads.
- Do not kink hoses.

4.2 Scope of delivery

Delivery of the completely assembled units includes:

- assembled hydraulic power pack with motor (connections P and T sealed with plastic screw plugs).

Scope of delivery does not include:

- bolts, screws and sleeves for attachment
- electrical connecting lines (if to be attached separately on the motor)
- hydraulic fluid

4.3 Checking the delivery

Unpacking

1. Take out the product.
2. Check that the product is complete and check for transport damage.
   - ► Note all transport damage on the transport documents or the carrier's delivery note.
   - ► Take photos of any transport damage and submit a claim to the manufacturer.
3. Dispose of the product packaging correctly in accordance with local regulations.

DAMAGE

For any defect found, file a complaint immediately with:
HAWE Micro Fluid GmbH
Borsigstraße 11
93092 Barbing, Germany
Tel.: +49 89 379100-6000

Claims for damages can only be addressed within the applicable complaint periods. HAWE does not accept any liability for subsequent complaints.

4.4 Storage

DAMAGE

Property damage from incorrect storage
Incorrect storage can lead to damage. Refer to the technical data.

Store the product and its separate components as follows:

- Do not store outdoors.
- Store dry and free of dust.
- Protect the equipment against sunlight (UV radiation).
- optimum storage temperature: 15 - 20 °C
- Do not store close to ignition and heat sources, aggressive media (e.g. acids, fuel, lubricants), and ozone-emitting illuminants (e.g. fluorescent light sources, mercury vapor lamps).
- Protect the valves and valve controllers against gumming of the hydraulic fluid if stored more than 2 years. To do so, contact the manufacturer of the hydraulic fluid.
- Avoid mechanical jolts.

5 Assembly and installation

Observe the following safety instructions additionally to the safety instructions in chapter For your safety.

⚠ WARNING

Risk of fatal injury / malfunction due to incorrectly installed hydraulic system

Incorrectly installed hydraulic systems or use of unsuitable line cross sections and connectors can cause malfunctions, accidents, and irreversible or even fatal injuries.

1. Wear protective clothing.
2. Note the specified installation method and position of the hydraulic system.

⚠ CAUTION

Risk of tripping and falling

Insufficient space for performing the necessary jobs on the hydraulic system increases the risk of accidents due to tripping or falling.

- Provide a ladder or access platform to make sure the workspace can be reached safely.
- Ensure there is sufficient space to perform all assembly and installation work.
- Do not climb onto the hydraulic system.

⚠ CAUTION

Risk of falling from leaking hydraulic fluid

Spilled or leaked hydraulic fluid can form a slippery film on the floor.

- Use suitable aids when filling or bleeding.
- Check all connecting elements that convey oil for leaks before switching on the motor in the parent system.
- Wipe up leaked hydraulic fluid with suitable aids.

5.1 Hydraulic connection

DAMAGE

Property damage from incorrectly installed hydraulic system

- Assembly by trained specialists only.
- Ensure all labels and markings of the hydraulic system are easily visible and legible after assembly.
- Check installation space/connection points for damage.

DAMAGE

Damage from connecting soiled components

Connecting soiled components may cause system failure and irreparable damage.

- Clean the workspace before connecting the hydraulic system.
- Clean hydraulic components before connecting the hydraulic system.
- Only use hydraulic fluid of sufficient grade.

Add components which are not in the scope of delivery (e.g. bolts, screws and sleeves for attachment, hydraulic fluid). Use filtered hydraulic fluid.

1. Space required for assembly, installation and commissioning: 500 x 500 x 500 mm (WxHxD).
2. Place the hydraulic power pack in position in the higher-level machine.
3. Ensure all the fastening bores and hydraulic connections align correctly. Installation space: 400 x 150 x 200 mm (W x H x D)
4. Fasten the hydraulic power pack via the 2 x M6 fastening bores on the equipment rack.
5. Connect the hydraulics:
   - Exact connection designation and dimensions in D 6025
   - Version Q: via the 2 x M10x1 threaded connections on the equipment rack
   - Version H: via the 1 x M14x1.5 threaded connection on the equipment rack
6. After a week of operating time at the latest, check the fittings.

5.2 Electrical connection

DANGER

Risk of fatal injury from electric shock

Touching live components directly or indirectly causes injury or death.

- Only trained specialist personnel are permitted to replace or connect electronic components.
- Obey all applicable electrical safety rules.
- Only connect electric lines to the hydraulic system while the system is de-energized.

WARNING

Electrical and magnetic fields

Electrical and magnetic fields impair the functionality of cardiac pacemakers and implanted defibrillators.

- People with pacemakers or implanted defibrillators must maintain a sufficient distance from magnets.
- Advise people with pacemakers or implanted defibrillators against approaching magnets.
- Cordon off the area around the drive system and affix suitable warning signs to the barriers.

DAMAGE

Hazard for electronic components – property damage

Electromagnetic waves lead to malfunctions of electrical or electronic equipment.

- ► To prevent electrostatic discharge, do not touch electronic components and contacts.
- ► After switching off the electrical power supply, wait at least 15 minutes for the energy stored in the capacitors to dissipate.
- ► Do not expose components to moisture and an aggressive environment.
- ► To avoid overheating, always keep ventilation openings (if any) open and allow sufficient air circulation.

1. Secure the unit against being switched on unintentionally.
2. Connect the electromagnetic valve(s) to the control system:
   - The coil has a socket for 2-pin plugs.
   - Use a cable with the matching plug (AMP Superseal 1.5 series).
   - Insert the plug on the cable into the socket of the coil and connect the cable to the electric power supply.
   - Any pin assignment is allowed.
3. Connect the temperature sensor. (Temperature sensor only available with motor C2D.)
4. Wire motor M with the machine controls in accordance with the circuit diagram.
5. Connect the hydraulic power pack to the electrical power supply.
6. Check the electrical connection after a week's operating time.

When connecting the temperature sensor and motor, observe the pin assignment from the applicable technical data sheet (D 6025).

6 Start-up

⚠ WARNING

Danger of crushing/malfunction from unexpected startup

Body parts may be crushed or severed if the system starts up unexpectedly.

- ► Keep the danger zone clear of people.
- ► Wear protective clothing.

⚠ CAUTION

Burn hazard from hot surfaces and hydraulic fluid

A burn hazard results from directly or indirectly coming into contact with hot hydraulic fluid and hot components of the hydraulic system.

- ► Wear work gloves.
- ► Arrange the access to the hydraulic system in such a way that hot surfaces are not accessible to the user.
- ► Wait until the hydraulic system has cooled down before servicing or disassembling it.

ℹ The pressure-limiting valve has been factory-set to the maximum permissible operating pressure of the hydraulic power pack and marked with sealing wax. Do not adjust without consulting HAWE.

☑ Only trained specialist personnel may perform commissioning.

☑ Secure the unit against being switched on unintentionally.

1. Check the hydraulic power pack has been connected correctly:
   - ✓ hydraulically: fastened tight, no leakage
   - ✓ electrically: wiring, power supply, control
   - ✓ fixed installation: attachment to the machine, in/on the base. Are all markings clearly visible?
2. Check the hydraulic fluid level.
3. Switch on the power supply for the control system.
4. Vent the connecting hydraulic lines to the hydraulic power pack. During the venting process, it is not permitted for anyone to be in the hazardous area. Please refer to the operating instructions of the machine manufacturer/system operator for the measures and regulations for a safe venting process.
5. Check the hydraulic fluid level again after several strokes or after the hydraulic system has been vented.
6. Check the valve switching and function sequence.
7. After a week of operating time at the latest, check the fittings.

7 Operation

7.1 Switching the hydraulic system on/off

The product is switched on and off via the system control in accordance with the machine manufacturer's operating instructions. For this, the commissioning of the product must have been performed properly.

8 Maintenance

Maintenance measures consist of inspection, service and repair. Maintenance measures are described here.

- Maintenance work must only be carried out by qualified personnel.
- Tasks not described in this chapter may only be carried out by HAWE Service.
- If faults or damage occur, switch off the hydraulic system immediately.
- Observe the information in the supplier documentation.
- Document all activities in a maintenance log.

⚠ WARNING

Danger of accident and fatal injury due to lack of maintenance or careless maintenance
Omitted or negligently performed maintenance can cause the hydraulic system to malfunction. Improperly performed maintenance or improperly conducted troubleshooting can pose a danger to personnel.

- Read and abide by all instructions provided in this section.

Observe the following safety instructions additionally to the safety instructions in chapter For your safety.

⚠ DANGER

Risk of fatal injury from electric shock
Touching live components directly or indirectly causes injury or death.

- Only trained specialist personnel are permitted to replace or connect electronic components.
- Obey all applicable electrical safety rules.
- Only connect electric lines to the hydraulic system while the system is de-energized.

⚠ DANGER

Danger to life from pressurized systems
When lines and components on pressurized systems are disconnected, hydraulic fluid escapes at high pressure and penetrates deep into the body via the skin and eyes. Severe injury or death.

- Depressurize the hydraulic system including the pressure tank.
- Secure the hydraulic system against unintentional restart.
- Check components for correct assembly before pressure is applied.
- Observe maximum pressure load for fittings and lines.

⚠ WARNING

Danger of accident and fatal injury due to lack of maintenance or careless maintenance
Omitted or negligently performed maintenance can cause the hydraulic system to malfunction. Improperly performed maintenance or improperly conducted troubleshooting can pose a danger to personnel.

- Read and abide by all instructions provided in this section.

⚠ WARNING

Danger of crushing/malfunction from unexpected startup

Body parts may be crushed or severed if the system starts up unexpectedly.

- Keep the danger zone clear of people.
- Wear protective clothing.

⚠ CAUTION

Burn hazard from hot surfaces and hydraulic fluid

A burn hazard results from directly or indirectly coming into contact with hot hydraulic fluid and hot components of the hydraulic system.

- Wear work gloves.
- Arrange the access to the hydraulic system in such a way that hot surfaces are not accessible to the user.
- Wait until the hydraulic system has cooled down before servicing or disassembling it.

⚠ CAUTION

Risk of falling from leaking hydraulic fluid

Spilled or leaked hydraulic fluid can form a slippery film on the floor.

- Use suitable aids when filling or bleeding.
- Check all connecting elements that convey oil for leaks before switching on the motor in the parent system.
- Wipe up leaked hydraulic fluid with suitable aids.

8.1 Maintenance plan

Failure of hydraulic systems
Hydraulic system failures are often caused by an incorrect choice of hydraulic fluid or excessive solid contamination in the hydraulic fluid. High solid contamination is due to lack of maintenance of the hydraulic system.

- Select hydraulic fluid according to specifications.
- Carry out the activities described in this section carefully and in due time.

Activities to be performed	Interval		
	after x days	as required	in the event of malfunction
Mechanics and hydraulics			
Visual check for external leakage	30		
Venting the hydraulic system		✓	
Checking the hydraulic fluid level	90		
Replacing the hydraulic fluid		✓	
Replacing 2/2-directional seated valve SP3			✓
Electrics			
Checking electrical contacts (AMP Superseal 1.5 series)	7		
Checking cables for damage	365		

8.2 Service

8.2.1 Checking for leakage in the hydraulic system

Maintenance interval

Monthly

Aids, tools, materials

- Clean, lint-free cloth

1. Perform the following in sequence to determine if there are any leaks:
   - Apply pressure to the hydraulic system
   - Remove any component coverings which would hinder the check
2. If leakage is discovered:
   - Remove hydraulic fluid with a clean, lint-free cloth
   - After 5 minutes, check the leak again to see if hydraulic fluid has escaped.
   - If hydraulic fluid has escaped again, re-tighten the hydraulic connections.
   - If re-tightening the hydraulic connections does not prevent hydraulic fluid from escaping, the hydraulic power pack must be replaced.

8.2.2 Venting the hydraulic system

DAMAGE

Material damage due to operation without hydraulic fluid
If the hydraulic fluid level falls below the minimum level, the operating temperature may rise, the hydraulic pumps may suck in air and the hydraulic pump may fail due to cavitation.

- ► During initial commissioning and after each opening of the hydraulic system
- ► Fluid level too low: top up hydraulic fluid.

Maintenance interval

If necessary

Aids, tools, materials

- None

1. The machine manufacturer must set up provisions for venting on the consumer for the hydraulic system.

8.2.3 Checking the hydraulic fluid level and replacing it

Maintenance interval

Check the fluid level every 90 days. The hydraulic fluid is replaced as required.

DAMAGE

Material damage due to operation without hydraulic fluid
If the hydraulic fluid level falls below the minimum level, the operating temperature may rise, the hydraulic pumps may suck in air and the hydraulic pump may fail due to cavitation.

- ► During initial commissioning and after each opening of the hydraulic system
- ► Fluid level too low: top up hydraulic fluid.

Aids, tools, materials

- Cleaning cloths and receptacle for hydraulic oil (capacity: litres)
- Funnel and filter (10 µm) for pouring in the hydraulic fluid

Checking the fluid level

1. Check the fluid level in the tank
2. If the fluid level is too low, add hydraulic fluid

Replacing

1. Switch off the hydraulic system and secure it from being unintentionally switched on again.
2. Ensure the work environment is clean.
3. Release the hydraulic power pack from the higher-level machine so that the tank can be opened.
4. Place a suitable receptacle under the hydraulic power pack.
5. Undo the drain screw on the tank.
6. Tilt the hydraulic power pack so that the hydraulic fluid can completely flow out of the tank into the receptacle.
7. Filter new hydraulic fluid (mineral oil in accordance with DIN 51524).
   (Recommended filter: 10 µm.)
8. Pour the filtered hydraulic fluid into the tank using a funnel via the filler and breather filter.
9. Close the tank.
10. Attach the hydraulic power pack again.

11. Vent the hydraulic system using the venting provisions on the consumer.
12. Check the hydraulic fluid level in the hydraulic system.
    - ► Fluid level too low: top up with hydraulic fluid
    - ► Fluid level too high: drain hydraulic fluid
13. Properly dispose of the hydraulic fluid, hydraulic fluid container and any cloths contaminated with hydraulic fluid.

8.2.4 Replacing 2/2-directional seated valve SP3

Maintenance interval

In the event of malfunction.

Aids, tools, materials

- Hex key, wrench size 5
- New seated valve

1. Switch off the hydraulic system and secure it from being unintentionally switched on again.
2. Ensure that the system is depressurized.
3. Remove any component coverings.
4. Disconnect the connection cable from the coil of the solenoid valve.
5. Uninstall the seated valve.
6. Push in the new seated valve and screw on both cylinder screws M 6x12 with a tightening torque of 3+0.5 Nm.
7. Connect the connection cable to the coil of the solenoid valve.
8. Check the function of the solenoid valve by actuating.
9. Commission the hydraulic power pack.

9 Disassembly and disposal

Disassembly

1. Shut down the hydraulic system in the machine controls.
2. Secure it against unintentional restarting.
   ✓ System shut down securely.
3. Drain hydraulic fluid.
   ✓ The hydraulic system has been depressurized and can be disassembled.
4. Disconnect electrical cables.
5. Disconnect hydraulic lines.
6. Disassemble electrical and hydraulic components.
7. Properly dispose of all disassembled parts.

Disposal

Dispose of hydraulic fluid and system components as follows:

- Dispose of hydraulic fluid, packaging/containers, soaked cleaning cloth, etc., as stipulated in the specifications for hydraulic fluid according to the regional waste disposal requirements.
- Dispose of the electronic components at approved collection points or with approved disposal companies according to local regulations.
- Dispose of metal with approved specialist disposal companies.

10 Troubleshooting

The following table lists possible faults and measures to eliminate these. Contact the manufacturer in case of faults that cannot be remedied by following the descriptions here.

Fault	Possible cause	Test	Rectification
Motor does not start	Faults with the motor cable	Check the motor cable for abrasion points, breaks, for example	Replace motor
	For motor A4D and B2D: triggering of the internal temperature switch due to the permitted motor temperature being exceeded.		Allow it to cool down
Motor is running but pump has no suction – hydraulic power pack does not convey hydraulic fluid	Hydraulic fluid level in the tank too low	Check the hydraulic fluid level	Top up hydraulic fluid
	Air in hydraulic system	Hydraulic system operates irregularly due to air in the system	Vent the hydraulic system
No pressurization/pressure too low	Incorrect rotation direction of the motor	Check the motor rotation direction	Correct the motor rotation direction
	Incorrect setting of pressure-limiting valve	Check the seal on the pressure-limiting valve for damage.	Contact HAWE.
Hydraulic fluid is escaping	Seal is faulty	Check the hydraulic lines	Replace the seal.
Contamination of the hydraulic fluid	Floating or deposited contamination in the hydraulic fluid due to debris, dirt, by-products from ageing	Visual check	Hydraulic locking unit must be replaced. Contact HAWE.
Cylinder cannot be retract-ed	Solenoid M faulty	Check resistance R; if R → ∞, solenoid M faulty.	Replace 2/2-directional seated valve SP3.
Cylinder does not hold position (For version H)	2/2-directional seated valve SP3 is not tight		Replace 2/2-directional seated valve SP3.

11 Appendix

Other documents, such as technical data sheets, the TÜV certificate, the letter stipulating service life, the load case definition, the installation drawing, as well as optional documents such as a factory test certificate, form part of the technical documentation, and will be sent separately.

The attached product information from third-party manufacturers is not necessarily the most current version. To obtain the latest product information, contact the respective manufacturer.

11.1 Technical data

11.1.1 Operating conditions

Installation position	A 065	Vertical (tank on top)	
	A 100	Horizontal or vertical (tank on top)	
Attachment	Firmly screwed, 2 x M6 on the equipment rack preferably elastic suspension		
Pump design	External gear pump		
Typical noise level (distance 1 m, decoupled attachment)		Motor	
	A 065	C2D	57 dB(A)
	A 100	F2E	57 dB(A)
	A 100	A4D	55 dB(A)
	A 100	B2D	55 dB(A)
	A 100	A4B	55 dB(A)
	A 100	R2E	60 dB(A)
Hydraulic fluid	Hydraulic fluid, according to DIN 51 524 Parts 1 to 3; ISO VG 10 to 68 according to DIN ISO 3448 Viscosity range: 10 - 500 mm2/s Other media on request		
Cleanliness level	**ISO 4406** 20/18/15		
Temperatures	A 065	Environment: approx. -15 to +80 °C, hydraulic fluid: +10 to +40 °C	
	A 100	Environment: approx. -30 to +80 °C, hydraulic fluid: -15 to +80 °C	
	Pay attention to the viscosity range		
Service life	10 years with max. 10,000 cycles		

max. Operating pressure	A 065	150 bar (depending on the application)
	A 100	210 bar (depending on the application)
max. Flow rate	3 lpm	
Filter retention rate	$\beta_{25} > 75$	

11.1.2 Weights and measures

During transport

Weight without hydraulic fluid		**with motor**	**Q**	**H**
	A 065	C2D	1.8 kg	--
	A 100	F2E	4.7 kg	5.2 kg
	A 100	A4D	4.3 kg	--
	A 100	B2D	4.3 kg	--
	A 100	A4B	5.4 kg	--
	A 100	R2E	5.4 kg	6 kg

11.1.3 Electrical data

Motor C2D

Voltage	24 V direct current
Nominal power	250 W
Duty cycle	S3 - 20 % ED
Electrical connection	2 x flex (2x)
Protection class	IP50 per DIN 40050

Terminal assignment

Temperature measurement

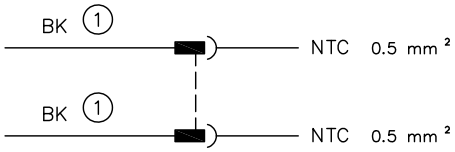

1 black

Motor

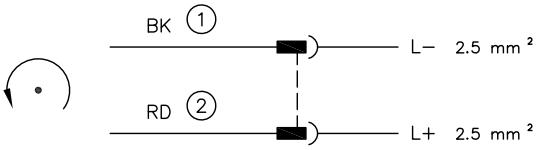

Rotation direction of the motor shaft: left (looking at the shaft)

1 black
2 red

Characteristic line

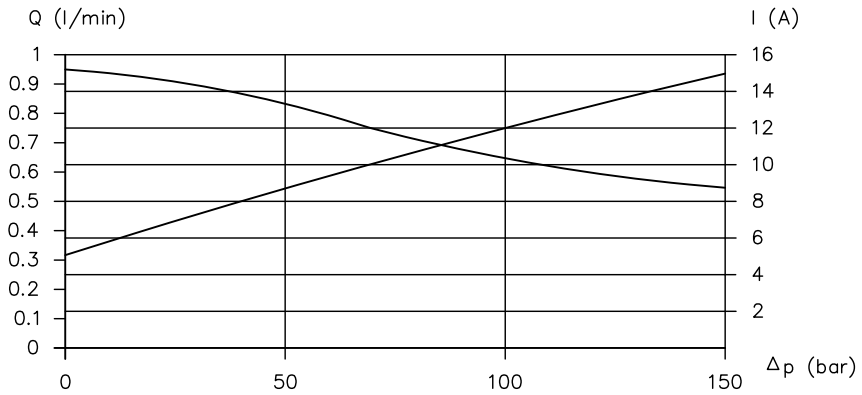

Δp operating pressure (bar); Q delivery flow (lpm); I current consumption (A)

Motor F2E

voltage	12 V (DC)
rated otput	350 W
duty cycle*	up to 40 % (depends on je nach delivery flow, pressure, environmental condition)
electrical connection	2 x M6 (eyelet)
protection class	IP54 concerning to DIN 40050

Terminal assignment

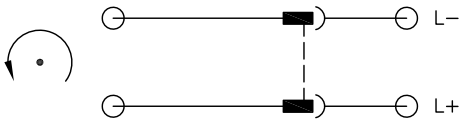

Rotation direction of the motor shaft: left (looking at the shaft)

Characteristic line pump A, C, E

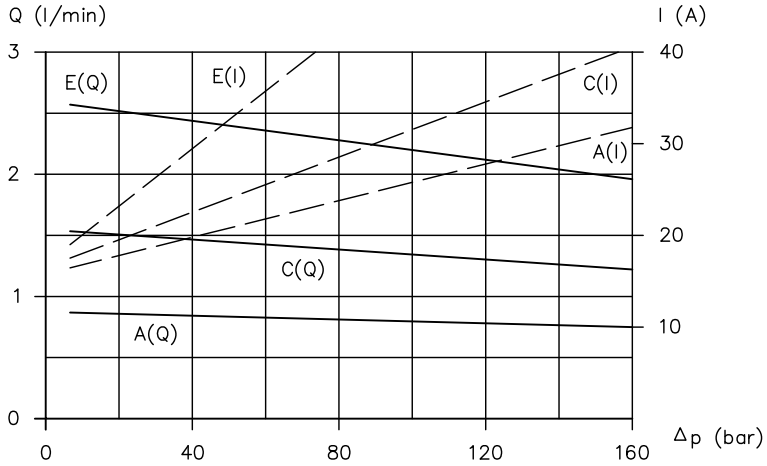

Δp operating pressure (bar); Q delivery flow (lpm); I current consumption (A)

Motor A4D

voltage	24 V (DC)
Nominal power	100 W
duty cycle*	up to 40 % (depends on je nach delivery flow, pressure, environmental condition)

electrical connection	2 x eyelet AWG 16 (1100 mm) red +, black -
protection class	IP50 concerning to DIN 40050

Terminal assignment

Rotation direction of the motor shaft: left (looking at the shaft)

1 black
2 red

Characteristic line pump A, B, C

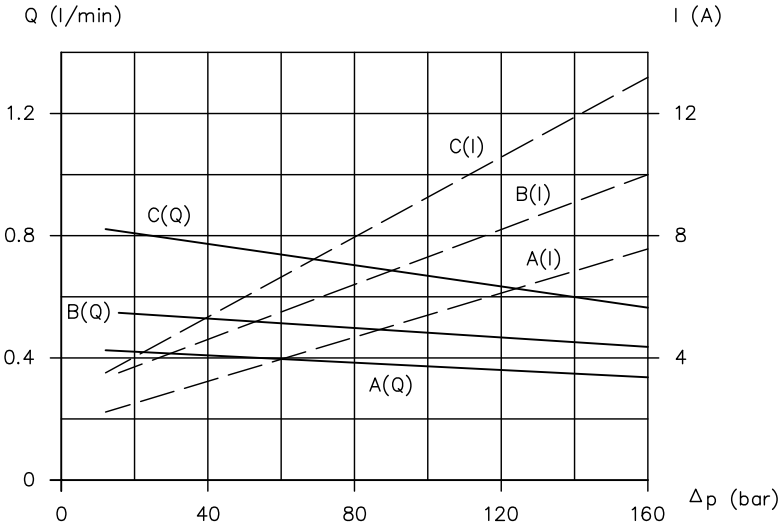

Δp operating pressure (bar); Q delivery flow (lpm); I current consumption (A)

Motor B2D

voltage	24 V (DC)
Nominal power	200 W
duty cycle*	up to 40 % (depends on je nach delivery flow, pressure, environmental condition)
electrical connection	2 x eyelet AWG 16 (1000 mm) red +, black -
protection class	IP50 concerning to DIN 40050

Terminal assignment

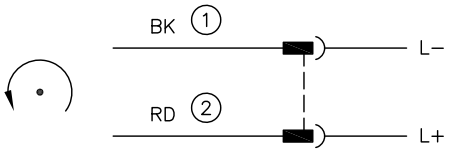

Rotation direction of the motor shaft: left (looking at the shaft)

1 black
2 red

Characteristic line pump A, B, C, D

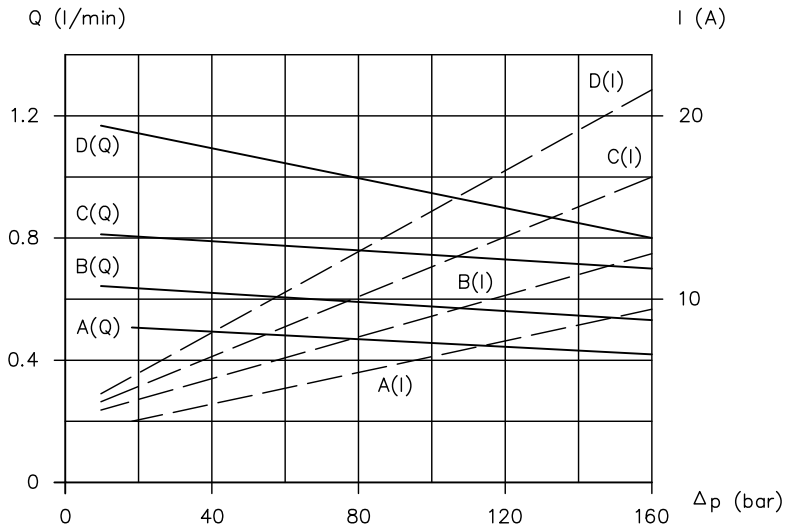

Δp operating pressure (bar); Q delivery flow (lpm); I current consumption (A)

Motor R2E

voltage	12 V (DC)
rated output	700 W
duty cycle*	up to 40 % (depends on je nach delivery flow, pressure, environmental condition)
electrical connection	1 x M6 and 1 x M8 for eyelet, 1 x 6.3 x 0.8 for flat push-in receptacle
protection class	IP54 concerning to DIN 40050

Terminal assignment

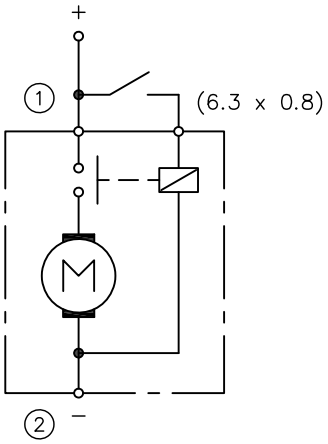

Rotation direction of the motor shaft: left (looking at the shaft)

1 M8 - red
2 M6 - black

Characteristic line pump X, D, E

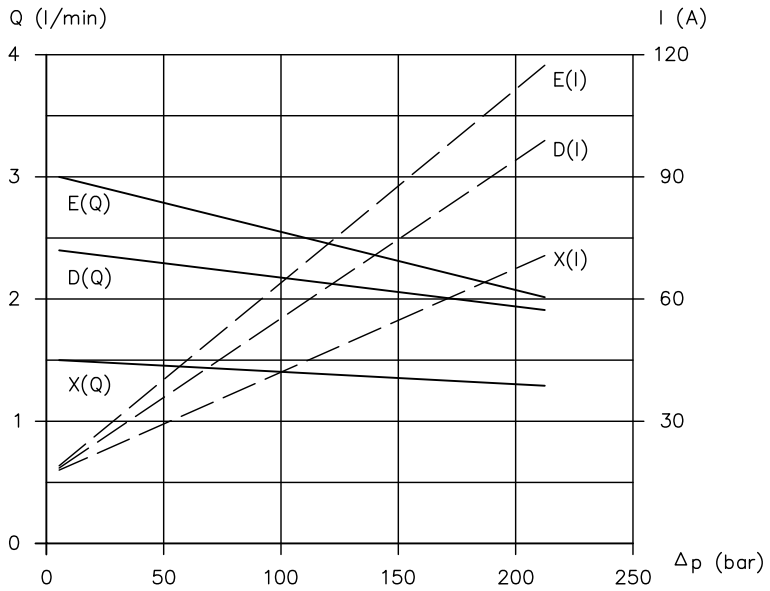

Δp operating pressure (bar); Q delivery flow (lpm); I current consumption (A)

Motor A4B

voltage	1 x 230 V alternating voltage
Nominal power	120 W
duty cycle*	up to 40 % (depends on je nach delivery flow, pressure, environmental condition)
electrical connection	cables with ferrules
protection class	IP44 concerning to DIN 40050

Terminal assignment

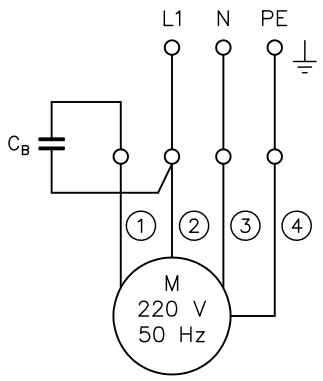

Rotation direction of the motor shaft: left (looking at the shaft)

1 brown
2 black
3 blue
4 yellow/green

Characteristic line pump A, B

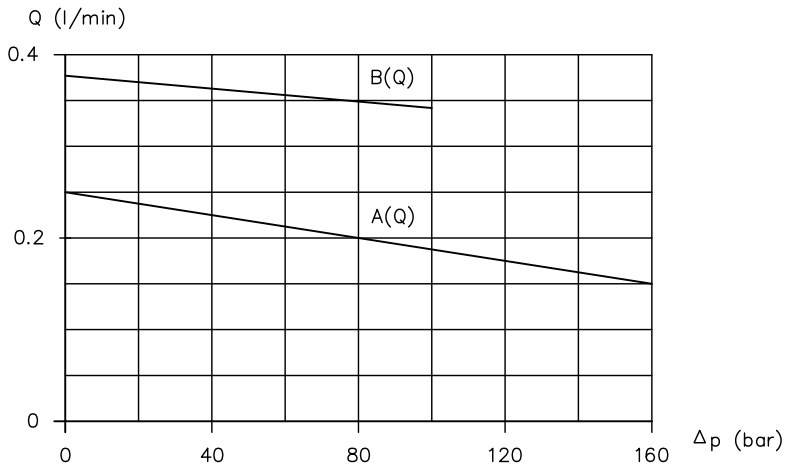

Δp operating pressure (bar); Q delivery flow (lpm)

11.2 Circuit diagram

Lifting version (H)

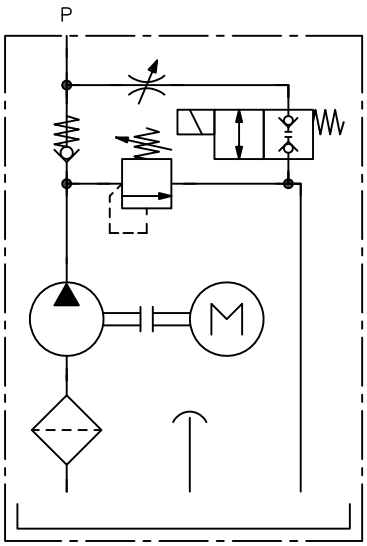

One flow direction (Q)

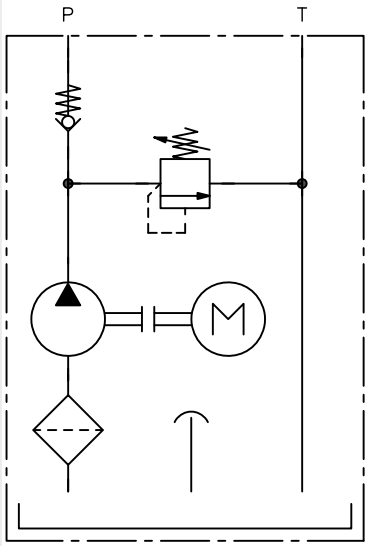

Contact details

Headquarters
HAWE Hydraulik SE
Einsteinring 17
85605 Aschheim
Germany
e-mail: info@hawe.de
www.hawe.com
Phone: +49 (0) 89 / 37 91 00 - 1000

Barbing
HAWE Micro Fluid GmbH
Borsigstraße 11
93092 Barbing
Germany
e-mail: info@hawe-microfluid.com
www.hawe.com
Phone: +49 (0) 89 / 37 91 00 - 6000

Further information

HAWE Hydraulik SE is a responsible development partner with application expertise and experience in more than 70 areas of mechanical and plant engineering. The product range includes hydraulic power packs, constant and variable pumps, valves, sensors and accessories. Modular systems are complemented by electronic components, are perfectly coordinated with the hydraulic components and simplifying control, signal evaluation and fault detection. The intelligent system solutions reduce energy consumption and operating costs. Compact drives save space and permit innovative machine design.

The company is certified in accordance with ISO 9001, ISO 4413, ISO 50001, OHSAS 18001.

■ HAWE subsidiaries and service repair shops **• HAWE sales partners**

- Germany
- Finland
- France
- Italy
- Austria
- Switzerland
- Slovenia
- Spain
- Sweden
- USA
- Canada
- Russia
- China
- India
- Japan
- Korea
- Singapore
- Australia

You can find further information on HAWE Hydraulik, your local contact and the range of hydraulics training sessions offered at: www.hawe.com.

B 6025 12-2021-1.1

HAWE Hydraulik SE
Einsteinring 17 | 85609 Aschheim/München | Postfach 11 55 | 85605 Aschheim |
Germany Tel +49 89 379100-1000 | Fax +49 89 379100-91000 | info@hawe.de | www.hawe.com