Connection blocks for dual-circuit pumps types AN, AL, NA

Product documentation

Operating pressure p_{max}:	500 bar
Flow rate Q_{max}:	20 lpm

D 6905 A/2
12-2020-1.0 en

HAWE HYDRAULIK

© by HAWE Hydraulik SE.
The reproduction and distribution of this document as well as the use and communication of its contents to others without explicit authorisation is prohibited.
Offenders will be held liable for the payment of damages.
All rights reserved in the event of patent or utility model applications.
Brand names, product names and trademarks are not specifically indicated. In particular with regard to registered and protected names and trademarks, usage is subject to legal provisions.
HAWE Hydraulik respects these legal provisions in all cases.
Printing date / document generated on: 15.12.2020

Contents

1 Overview of connection blocks for dual-circuit pumps types AN, AL, NA 4

2 Available versions, main data 5
2.1 Connection block type AN for low pressure and high pressure systems 5
2.2 Connection block type AL 221 with dual shut-off valve 8
2.3 Connection block type N for low-pressure and high-pressure systems with mounted directional valve 9
2.4 Intermediate block type UNA for low-pressure shut-off 14
2.5 Intermediate block type SS, VV, SX, VX for shutting off pump circuits as and whenever desired 15
2.6 Intermediate block type C 30 for pipe connector on low-pressure circuit 16
2.7 Spacer plates type U, some with additional functions 17
2.8 Piping connection block C 36 18

3 Parameters 19

4 Dimensions 21
4.1 Connection block type AN 21
4.2 Connection block type AL 221 23
4.3 Connection block type NA 24
4.4 Intermediate block type UNA 27
4.5 Intermediate block SS, VV, XS, XV, SX, VX 28
4.6 Intermediate block 28
4.7 Spacer plates type U, some with additional functions 29
4.8 Piping connection block C 36 30

5 Assembly, operation and maintenance recommendations 31
5.1 Intended use 31
5.2 Assembly information 31
5.3 Operating instructions 32
5.4 Maintenance information 32

6 Other information 33
6.1 Accessories, spare parts and separate components 34

1 Overview of connection blocks for dual-circuit pumps types AN, AL, NA

A connection block represents the connecting link between the hydraulic power pack and the hydraulic control. The connection blocks described here are suitable for combining with compact hydraulic power packs.
The connection blocks for dual-circuit pumps types AN, AL, NA incorporate one or two shut-off valves. Directional valves are integrated in some cases or can be flange-mounted or connected via pipes.
Intermediate blocks merge the flows of the dual-circuit pump through shut-off valves, thus allowing you to mount connection blocks for single-circuit pumps according to D 6905 AB.

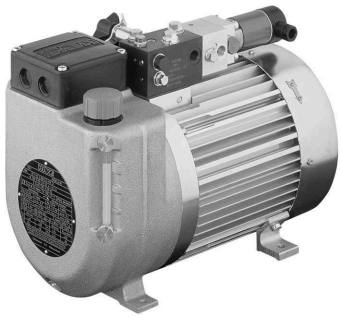

Hydraulic power pack with connection block NA

Features and benefits:

- Compact design
- Integrated pressure-limiting valve
- Integrated return line filter

© HAWE Hydraulik SE

2 Available versions, main data

2.1 Connection block type AN for low pressure and high pressure systems

The connection block with two-stage valve allows shutting off the low-pressure stage at a predefined operating pressure. A safety valve with unit approval provides maximum pressure safety for the system.

Circuit symbol:

AN 21

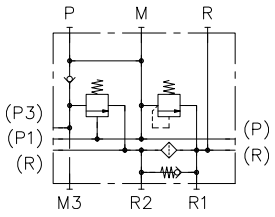

AN 23

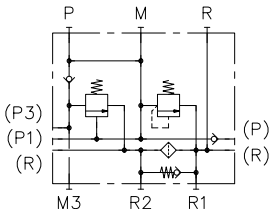

Order coding example:

AN 21 | R | F0 | V | - D40 | - C 200

- **Pressure setting for pressure-limiting valve** "Table 6"
- **Shut-off valve pressure setting** "Table 5"
- **Visual clogging indicator** "Table 4"
- **Return line filter** "Table 3"
- **Return stop at R** "Table 2"
- **Basic type** "Table 1"

Table 1 Basic type

Type	Description	Pressure p_{max} (bar)	Flow rate Q_{max} (lpm)
AN 21	Shut-off valve type CNE according to D 7710 NE Pressure-limiting valve type according to D 7710 MV Connecting thread ▪ P, R: G 3/8" ▪ R1, R2, M, M3: G 1/4" for mounted valve banks or pipe connectors.	500	18
AN 23	like AN 21 but with additional check valve in P gallery Only for mounted valve banks, a pipe connector is not possible.	500	18

Table 2 Return stop

Return stops prevent the vessel from leaking if the valve bank is removed from the connection block.

Coding	Description	Circuit symbol
No designation	w/o return stop	
R	with return stop (opening pressure approx. 0.1 bar)	
R1	with return stop (opening pressure approx. 0.9 bar)	

Table 3 Return line filter

Filter specifications need to account for flow rate of oil return flow. Cylinder area ratio and, if applicable, flow rate from accumulator need to be considered.

Spare filter elements Chapter 6.1

Coding	Filter fineness	Filter area (cm^2)	Filter rating (lpm)
F0	12 µm norm. 50%, 30 µm absolute	637	up to 7
F1	6 µm norm. 50%, 12 µm absolute	1230	up to 15
F2		1900	up to 21
F3		3190	up to 33

Table 4 Visual clogging indicator

Coding	Description	Notes	Circuit symbol
No designation	w/o visual clogging indicator		
V	Electric visual clogging indicator	▪ N/C contact ▪ switching pressure 2.1 bar ▪ switching capacity 100 W ▪ switching voltage max. 42 V ▪ protection class IP 65 (with cap) ▪ housing electroplated (Fe/Zn12cC) ▪ mechanical lifetime 10^6 switching cycles ▪ switching frequency 200/min	
G	Optical filter monitoring	▪ Indicator range 0 to 6 bar ▪ Filter service indicator (red range) 2 bar ▪ permissible pressure peaks 10 bar	
G1	Optical filter monitoring	▪ Indicator range 0 to 6 bar ▪ Filter service indicator (red range) 2 bar ▪ permissible pressure peaks 10 bar for other mounting position, see Chapter 4, "Dimensions"	

 © HAWE Hydraulik SE

Table 5 Pressure setting for shut-off valve

Coding	Pressure range p_{max} (bar)
L	120 to 150
M	95 ... 120
A	75 ... 95
B	60 ... 75
C	45 ... 60
D	30 ... 45
E	20 ... 30

Table 6 Pressure setting for pressure-limiting valve

The pressure-limiting valve should be set to at least 20 bar above the shut-off valve's pressure setting.

Coding	Pressure range p_{max} (bar)
B	120 to 150
C	95 ... 120
E	75 ... 95
F	60 ... 75

2.2 Connection block type AL 221 with dual shut-off valve

Connection block AL 221 with dual shut-off valve allows the high-pressure and low-pressure stages to be shut off for idle circulation separately. Both connections protrude from the block. This means that you cannot directly mount chained valves. The high-pressure and low-pressure circuit each feature one shut-off valve and one safety valve with unit approval. The safety valve's pressure setting should be at least 20 bar above shut-off pressure.

Connection block AL 221 allows linking valve banks via the pipe connectors. You cannot directly mount valve banks.

Circuit symbol:

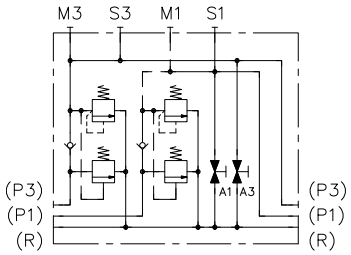

Order coding example:

AL 221 **- F 60/80 - D 120/150**

Pressure settings P1 and P3 (low pressure) "Table 8"

- First digits: Shut-off valve settings
- Second digits: Pressure-limiting valve settings

Basic type "Table 7"

Table 7 Basic type

Type	Description	Pressure p_{max} (bar)	Flow rate Q_{max} (lpm)
AL 221	Shut-off valves are internal function elements of type LV 20 according to D 7529 Pressure-limiting valve type CMVX according to D 7710 TUV Connecting thread ▪ P, R: G 3/8" ▪ S1, S3: G 1/2" ▪ M1, M3: G 3/4"	350	18

Table 8 Pressure setting P1 and P3

The pressure-limiting valve should be set to at least 20 bar above the shut-off valve's pressure setting.

Coding	Pressure range p_{max} (bar)
C	160 ... 350
D	120 ... 220
E	80 ... 140
F	40 ... 80

 © HAWE Hydraulik SE

2.3 Connection block type N for low-pressure and high-pressure systems with mounted directional valve

The connection block with two-stage valve allows shutting off the low-pressure stage at a predefined operating pressure. Single- or double-acting consumers can be extended/retracted by mounting an additional directional valve.

Circuit symbol:

NA 21, NA 21 NPTF

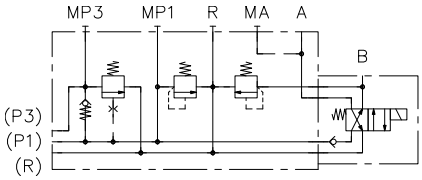

NA 31, NA 31 NPTF

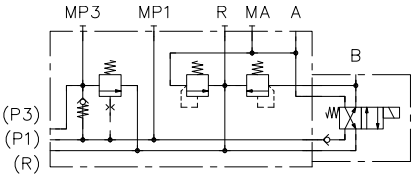

Order coding example:

NA 21	F1	- A630	R	/80	/V	/100	A	- ZP 1R	GZ 4-12 R	- G 24

Directional valve according to D 7300-12, "Table 18"

Intermediate plate "Table 17"

Pressure relief port B "Table 16"

Operating pressure port B "Table 15"

Idle circulation valve "Table 10"

Shut-off valve setting "Table 13"

Pressure-limiting valve adjustment device "Table 12"

Pressure setting for pressure-limiting valve "Table 11"

Return line filter "Table 14"

Basic type "Table 9"

Table 9 Basic type NA block

Type	Description	Pressure p_{max} (bar)	Flow rate Q_{max} (lpm)
NA 21	The main pressure-limiting valve branches off in the P1 line (upstream of the directional valve). Connecting thread ▪ A, MA, MP1, R: G 1/4" ▪ MP3: G 1/8" for 4/2-way directional valves ▪ Port B (on valve): G 1/4"	700	12
NA 21 NPTF	like NA 21 but connecting thread ▪ A, MA, MP1, R: 1/4"-18 NPTF Connecting thread ▪ MP3: 1/8"-27 NPTF	700	12
NA 31	The main pressure-limiting valve branches off in the A line (For applications in which p_B can be greater than p_A). Connecting thread ▪ A, MA, MP1, R: G 1/4" ▪ MP3: G 1/8" for 4/2-way directional valves ▪ Port B (on valve): G 1/4"	700	12
NA 31 NPTF	like NA 31 but connecting thread ▪ A, MA, MP1, R: 1/4"-18 NPTF Connecting thread ▪ MP3: 1/8"-27 NPTF	700	12

Table 10 Idle circulation valve

The idle circulation valve is only available in version NA 21 F.. (with return line filter, "Table 14").

Coding	Description	Circuit symbol
V	Closed when unpowered, type EM 11 V according to D 7490/1	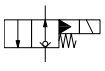
S	Open when unpowered, type EM 11 S according to D 7490/1	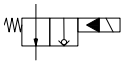
X	w/o idle circulation valve	

 © HAWE Hydraulik SE

Table 11 Pressure setting for pressure-limiting valve

Coding	Pressure range p_{max} (bar)
A	320 ... 700
B	250 ... 500
C	160 ... 315
E	80 ... 160
F	15 ... 80

Table 12 Pressure-limiting valve adjustment device

Coding	Version
No designation	Slot bolt and hex nut
D	Wing bolt and hex nut
R	Wing bolt and wing nut
V	Turn knob (self-locking)
H	Turn knob (lockable)

Table 13 Shut-off valve pressure setting

Coding	Pressure range p_{max} (bar)
No designation	386 ... 500
	256 ... 385
	201 ... 255
	151 ... 200
	101 ... 150
	10 ... 100

Different spring types are used for the various pressure ranges. This makes later adjustment possible only within the respective pressure range.

Table 14 Return line filter

The return line filter is only available as version NA 21 with idle circulation valve ("Table 10").

Spare filter elements Chapter 6.1

Coding	Filter fineness	Filter area (cm^2)	Filter rating (lpm)
F0	12 µm norm. 50%, 30 µm absolute	637	up to 7
F1	6 µm norm. 50%, 12 µm absolute	1230	up to 15

Table 15 Pressure setting port B

Pressure range (bar)	Description
20 ... 125	w/o pressure relief in port B ("Table 16")
126 ... 265	
266 ... 410	
411 ... 530	
20 ... 70	with pressure relief in port B ("Table 16")
71 ... 150	
151 ... 230	
231 ... 300	

Table 16 Pressure relief port B

To relieve pressure in port B, intentional leaking can be added to the pressure-limiting valves.

Coding	Description	Circuit symbol
No designation		
A	Leakage in port B	

Table 17 Intermediate plate

Intermediate plates can be mounted on the NA connection blocks to allow unpressurised start-up or for P gallery relief.

Coding	Description	Circuit symbol
No designation	no intermediate plate	
ZP 1 R12	2/2-way directional valve, closed when unpowered, according to D 7300-12 Solenoid voltage according to "Table 18"	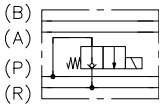
ZP 1 S12	2/2-way directional valve, open when unpowered, according to D 7300-12 Solenoid voltage according to "Table 18"	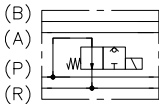

 © HAWE Hydraulik SE

Table 18 Directional valve

All 3/2- and 4/2-way directional valves according to D 7300-12 and the corresponding valves of size 1 according to D 7300-1 can be mounted. Always observe the valves' maximum operating pressure. The table lists a number of possible options. For more detailed data on the valves, refer to the above publications.

Coding	Description	Circuit symbol
X	w/o directional valve/reactive plate	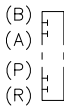
G 3-12-GM 24	3/2-way directional valve A - R open when unpowered, for 24 V DC with DIN line connector	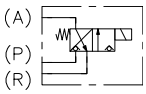
WGZ4-12 R-WGM 230	4/2-way directional valve P - B, A - R open when unpowered, for 230 V DC with DIN line connector	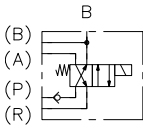
P 4-1	4/2-way directional valve P - A, B - R open when unpowered, pneumatically actuated	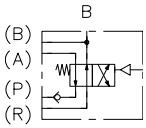

2.4 Intermediate block type UNA for low-pressure shut-off

The UNA intermediate block shut-off valve allows shutting off the low-pressure stage at a predefined operating pressure. You can mount connection blocks for single-circuit pumps according to D 6905 AB on the UNA intermediate block.

Circuit symbol:

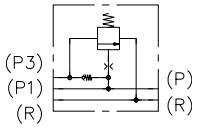

Order coding example:

UNA	150	AB

Connection block according to D 6905 AB

Pressure setting for low-pressure stage shut-off valve "Table 20"

Basic type "Table 19"

Table 19 Basic type

Type	Description
UNA	▪ $P1_{max}$ = 700 bar ▪ $P3_{max}$ = 300 bar ▪ Q_{max} (P1 + P3) = 20 lpm

Table 20 Pressure setting for low-pressure stage shut-off valve

Coding	Pressure range (bar)
No designation	256 ... 300
	201 ... 255
	151 to 200
	101 ... 200
	10 ... 100

Different spring types are used for the various pressure ranges. This makes later adjustment possible only within the respective pressure range.

 © HAWE Hydraulik SE

2.5 Intermediate block type SS, VV, SX, VX for shutting off pump circuits as and whenever desired

The intermediate blocks SS, VV, SX, VS etc. allow pressure to be shut off in each of the pump circuits separately by means of a solenoid valve. The intermediate blocks listed are capped at a maximum pressure of 450 bar and a flow rate of 20 lpm (P1 + P3).

Circuit symbol:

SS

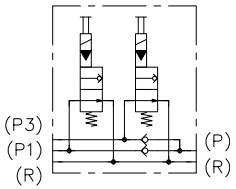

VV

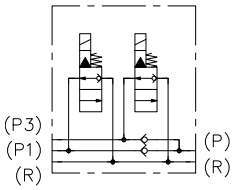

VX

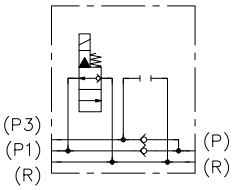

XS

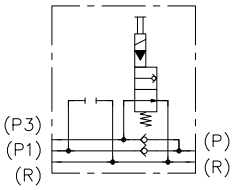

Order coding example:

S V AB

Connection block according to D 6905 AB

Valve for shutting off P3 (low pressure) "Table 21"

Valve for shutting off P1 (high pressure) "Table 21"

Table 21 Valves for shutting off high pressure/low pressure

Coding	Description	Circuit symbol
V	Closed when unpowered, type EM 11 V according to D 7490/1	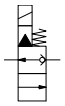
S	Open when unpowered, type EM 11 S according to D 7490/1	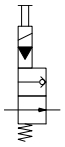
X	w/o shut-off valve	

2.6 Intermediate block type C 30 for pipe connector on low-pressure circuit

Intermediate block C 30 branches off the low-pressure circuit for a pipe connector. For high-pressure connection, you can mount a connection block for single-circuit pumps according to D 6905 AB.

Circuit symbol:

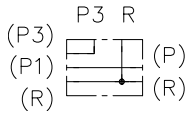

Order coding example:

C 30	AB

Connection block according to D 6905 AB

Basic type "Table 22"

Table 22 Basic type

Type	Description
C 30	▪ p_{max} = 700 bar ▪ Port P3: G 1/4" ▪ Port R: G 3/8"

 © HAWE Hydraulik SE

2.7 Spacer plates type U, some with additional functions

The spacer plates U increase the distance between the hydraulic power pack and the valve bank. Some of them integrate additional functions. Depending on version, connection blocks as per sections 2.1 - 2.3 or D 6905 AB are mounted.

Order coding example:

U 4X	AB

Connection block according to sections 2.1 to 2.3 or connection blocks type AB according to D 6905 AB

Basic type "Table 23"

Table 23 Basic type

Type	Description	Circuit symbol
U 2	40 mm spacer plate for mounting connection blocks according to sections 2.1 to 2.3	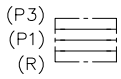
U 4	30 mm spacer plate with pipe connectors for low-pressure circuit P3 and for mounting connection blocks type AB according to D 6905 AB ▪ Port P3, R: G 3/8"	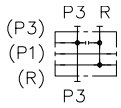
U 4X	like U 4, but with link between P3 and R	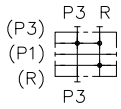
U 5	40 mm spacer plate with connection option for an external cooler as well as a connecting plate for the cooler connections. Mounting option for the connection blocks according to sections 2.1 to 2.3 ▪ Port K1, K2: G 1/2"	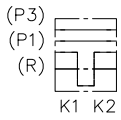
U 5X	As U 5, but without connecting plate for cooler connections	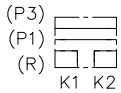

2.8 Piping connection block C 36

If the connection blocks according to sections 2.1 to 2.3 are to be used for a piped connection, the piping connection block C 36 can be used.

Circuit symbol:

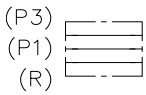

Order coding example:

C 36	AN

Connection block according to sections 2.1 to 2.3

Basic type "Table 24"

Table 24 Basic type

Type	Description
C 36	Connection block for pipe connector ▪ Connecting thread P1, P3, R: G 3/8"

 © HAWE Hydraulik SE

3 Parameters

General information

Designation	Connection block with/without pressure-limiting valve with unit approval
Design	Valve combination
Model	Manifold mounting valve
Material	Surface electrogalvanised Zn/Ni
Mounting position	As desired
Hydraulic fluid	Hydraulic oil: according to DIN 51 524 Part 1 to 3; ISO VG 10 to 68 according to DIN 51 519 Viscosity range: min. approx. 4; max. approx. 1500 mm^2/s Optimal operating range: approx. 10 to 500 mm^2/s Also suitable for biologically degradable pressure fluids type HEPG (polyalkylene glycol) and HEES (synthetic ester) at operating temperatures up to approx. +70°C.
Cleanliness level	**ISO 4406** 21/18/15...19/17/13
Temperatures	Ambient: approx. -40 ... +80°C, Fluid: -25 ... +80°C, Note the viscosity range! Start temperature: down to -40°C is permissible (observe start viscosities!), as long as the steady-state temperature is at least 20K higher during subsequent operation. Biologically degradable pressure fluids: Observe manufacturer's specifications. By consideration of the compatibility with seal material not over +70°C.

Weight

Connection block	**Type**	
	AN	= 4.5 kg
	AL 221	= 4.9 kg
	NA	= 3.6 kg
Intermediate block	UNA	= 1.6 kg
	SS, VV, etc.	= 1.9 kg
	SX, VX, etc.	= 1.6 kg
	C 30	= 0.5 kg
Spacer plates	U 2	= 0.1 kg
	U 3	= 0.15 kg
	U 4	= 0.6 kg
	U 4X	= 0.6 kg
	U 5	= 0.5 kg
	U 5X	= 1.7 kg
Piping connection block	C 36	= 0.2 kg

© HAWE Hydraulik SE

4 Dimensions

All dimensions in mm, subject to change.

4.1 Connection block type AN

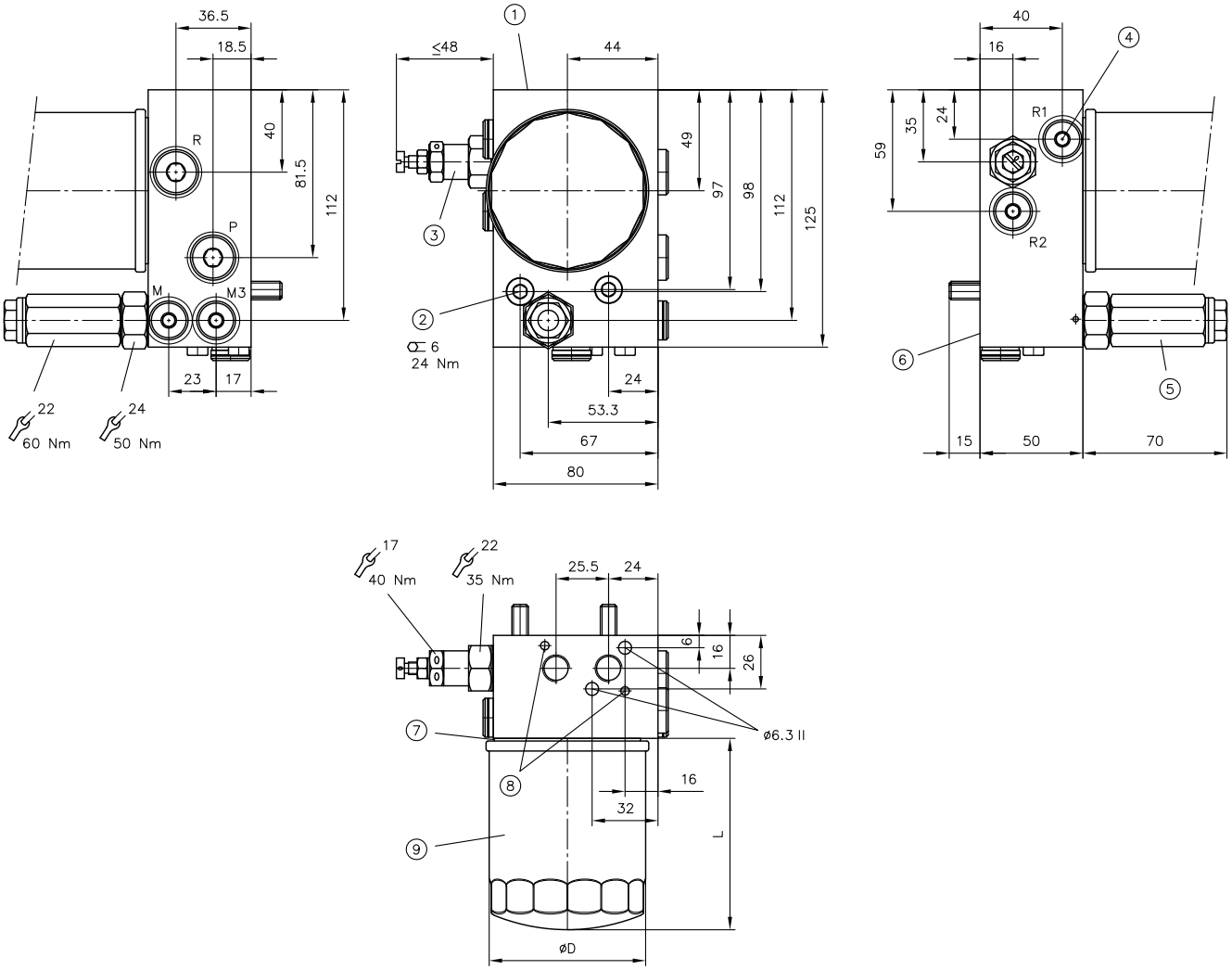

1 Mounting option for directional valve banks
2 Cylinder screw ISO 4762 - M8x55-8.8-A2K
3 Pressure-limiting valve CMV 1 according to D 7710 MV
4 Position for visual clogging indicator
5 Shut-off valve CNE 21 according to D 7710 NE
6 Flange surface for mounting on pump unit
7 Lightly oil seal when changing filter
8 Centring pin
9 Return line filter F0 to F3

Filter coding	L	∅D
F0	61	76
F1	93	76
F2	123	76
F3	142	93

	Connecting thread
P1, R	G 3/8"
R1, R2	G 1/4"
M, M3	G 1/4"

Visual clogging indicator

Coding **G**

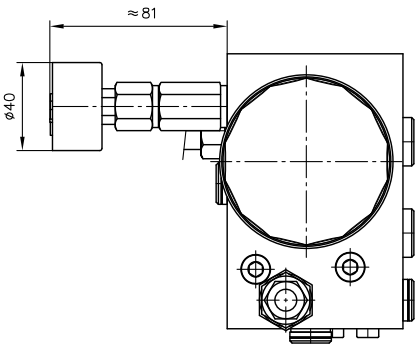

Coding **G1**

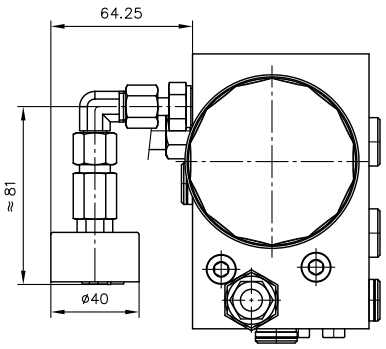

Coding **V**

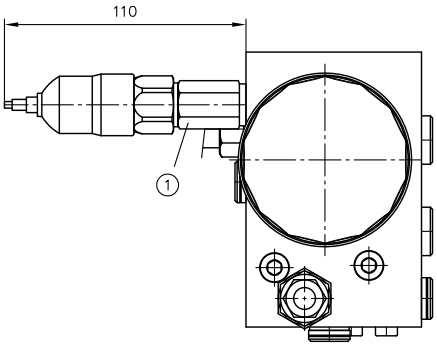

1 Only for version with return line filter F3

 © HAWE Hydraulik SE

4.2 Connection block type AL 221

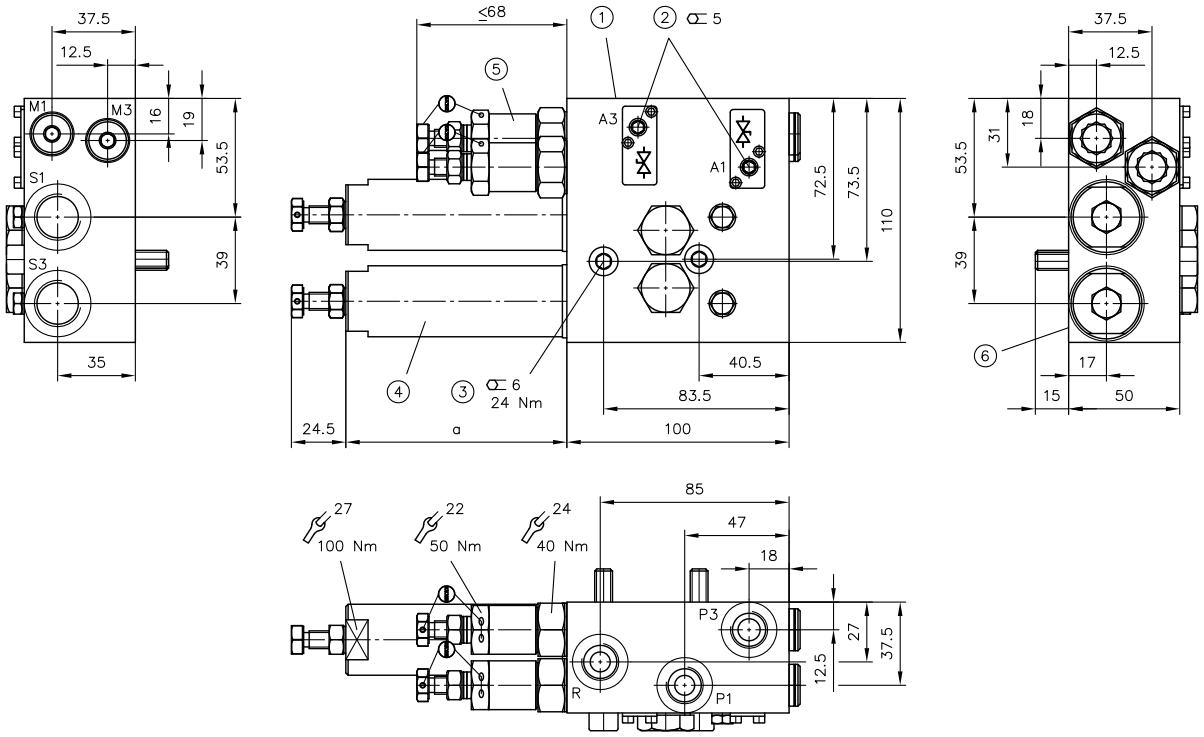

1 Mounting option for directional valve banks
2 Drain valve
3 Cylinder screw ISO 4762 - M8x65-8.8-A2K
4 Shut-off valve
5 Pressure-limiting valve type CMVX 2 according to D 7710 TUV
6 Flange surface for mounting on pump unit

Pressure range according to "Table 8"	a
D, E, F	99.5
C	120.5

	Connecting thread
P1, P3, R	G 3/8"
S1, S3	G 1/2"
M1, M3	G 1/4"

4.3 Connection block type NA

Version without filter

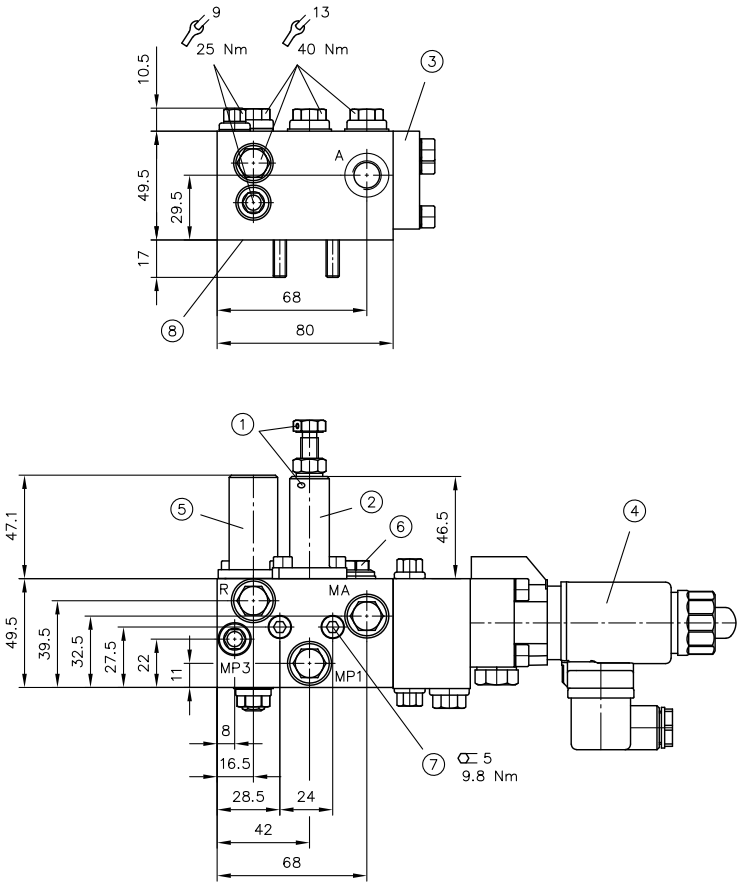

1 Sealing option
2 Main pressure-limiting valve (here with hex bolt as adjustment device)
3 Reactive plate coding X, see "Table 18"
4 Directional valve, see "Table 18"
5 Unloading valve
6 Pressure-limiting valve on port B
7 Cylinder screw ISO 4762 - M6x60-A2K
8 Flange surface for mounting on pump unit

	Connecting thread	
	NA 21, NA 31	NA 21 NPTF, NA 31 NPTF
A, MA, MP1, R	G 1/4"	1/4"-18 NPTF
MP3	G 1/8"	1/8"-27 NPTF

© HAWE Hydraulik SE

Version with filter

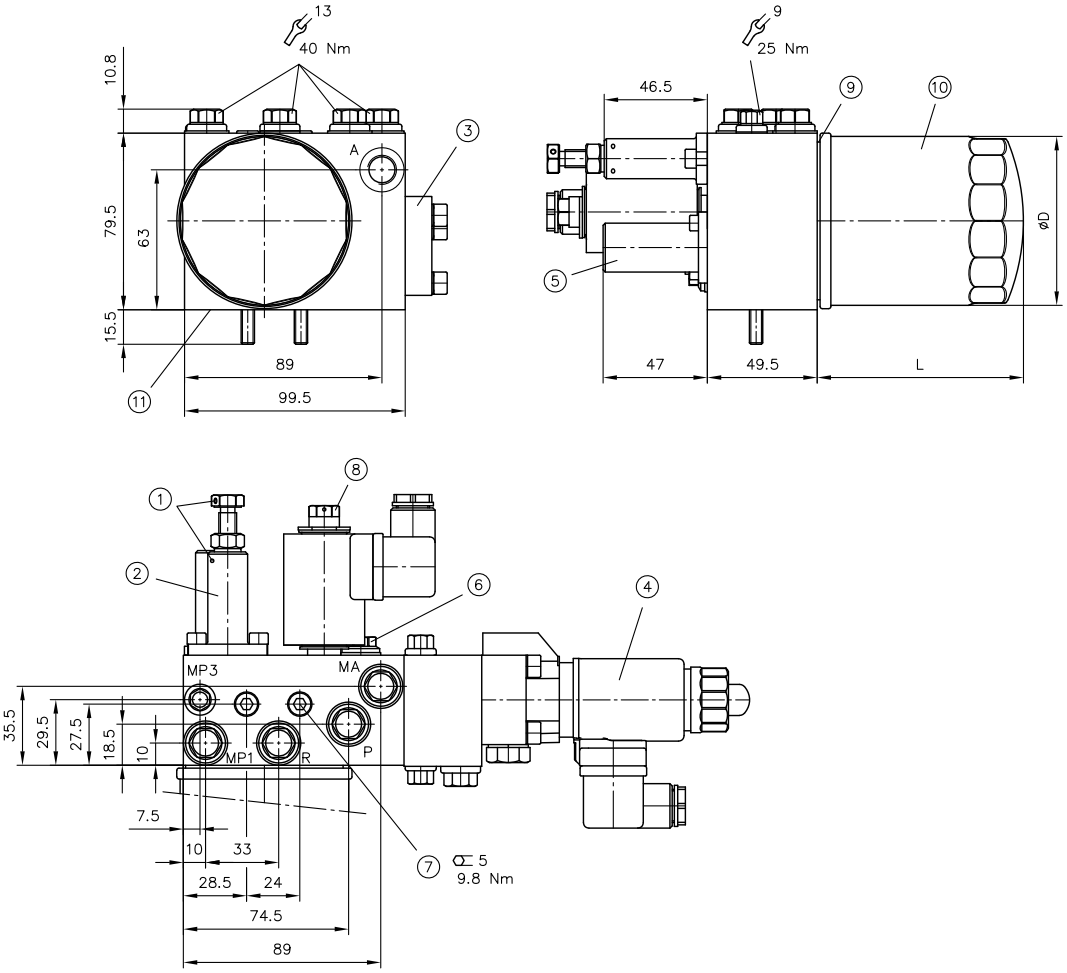

1 Sealing option
2 Main pressure-limiting valve (here with hex bolt as adjustment device)
3 Reactive plate coding X, see "Table 18"
4 Directional valve, see "Table 18"
5 Unloading valve
6 Pressure-limiting valve on port B
7 Cylinder screw ISO 4762 - M6x90-A2K
8 Idle circulation valve, see "Table 10"
9 Lightly oil seal when changing filter
10 Return line filter F0 and F1
11 Flange surface for mounting on pump unit

Filter coding	L	∅D
F0	61	76
F1	93	76

	Connecting thread
	NA 21 F
A, MA, MP1, P, R	G 1/4"
MP3	G 1/8"

Other adjustment devices

(main pressure-limiting valve)

Fixed

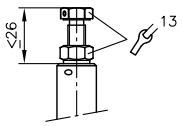

Coding **D**

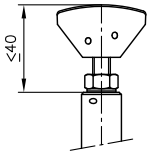

Coding **R**

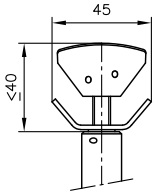

Coding **V**

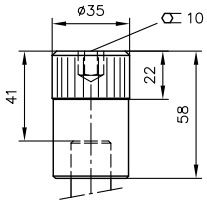

Coding **H**

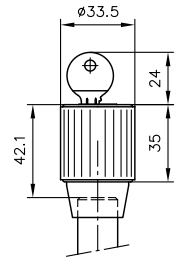

Intermediate plates type ZP 1

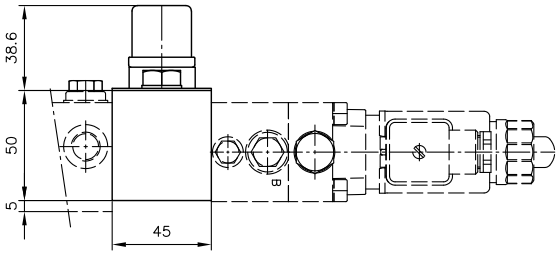

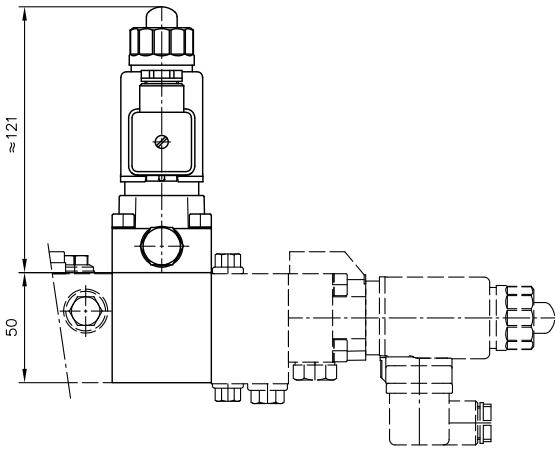

 © HAWE Hydraulik SE

Coding **X**
(reactive plate)

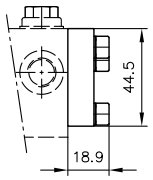

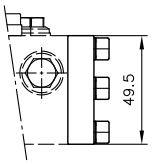

Coding **G 3-12**

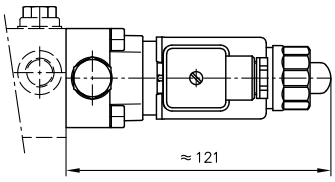

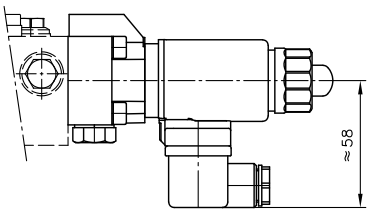

Coding **GZ 4-12**

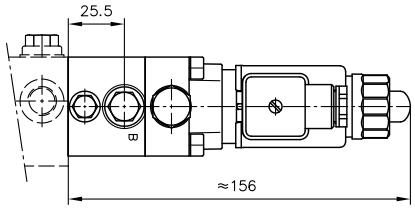

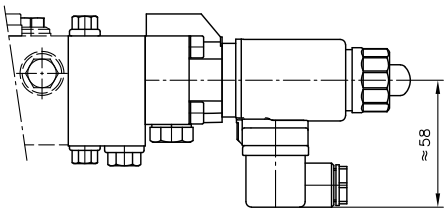

Coding **P 4-1**

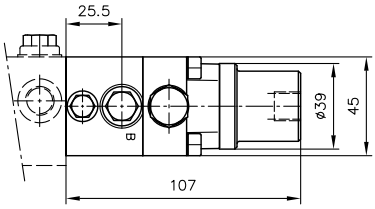

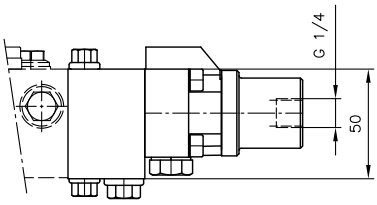

4.4 Intermediate block type UNA

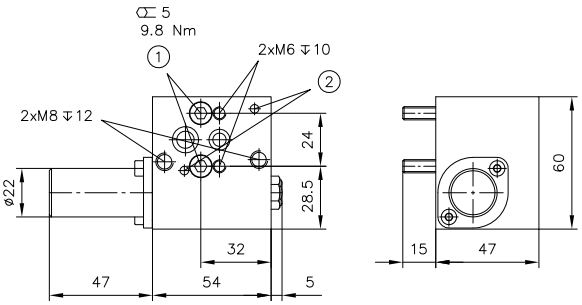

1 Cylinder screw ISO 4762 - M6x55-A2K
2 Centring pin

4.5 Intermediate block SS, VV, XS, XV, SX, VX

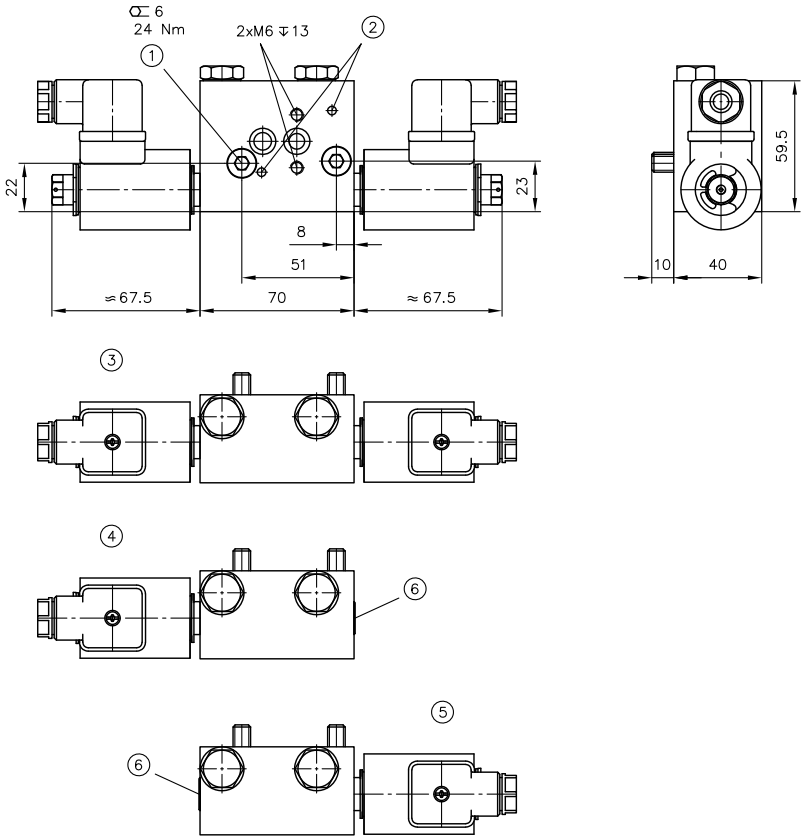

1 Cylinder screw ISO 4762 - M8x40-8.8-A2K
2 Centring pin
3 Type SS, VV, SV, VS
4 Type XS, XV
5 Type SX, VX
6 Tapped plug 7490 009 with O-ring 10.3x2.4 AU 90 Shore

4.6 Intermediate block

Coding **C30**

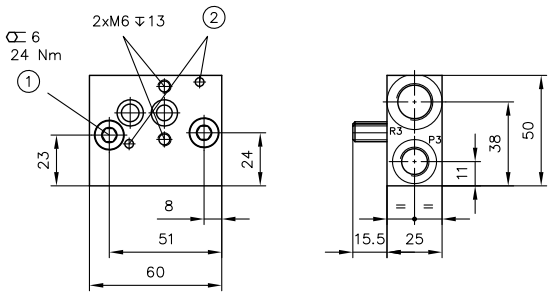

1 Cylinder screw DIN 6912-M8x35-8.8-A2K
2 Centring pin

	Ports (ISO 228-1)
R3	G 3/8
P3	G 1/4

 © HAWE Hydraulik SE

4.7 Spacer plates type U, some with additional functions

Coding **U 2**

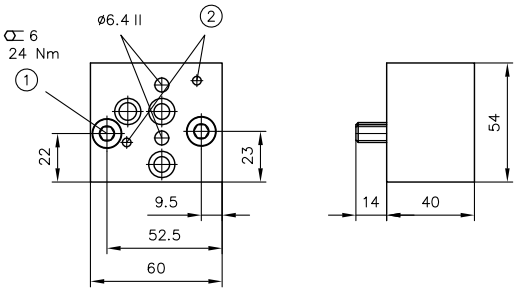

1 Cylinder screw ISO 4762-M8x45-8.8-A2K
2 Centring pin

Coding **U 4, U 4X**

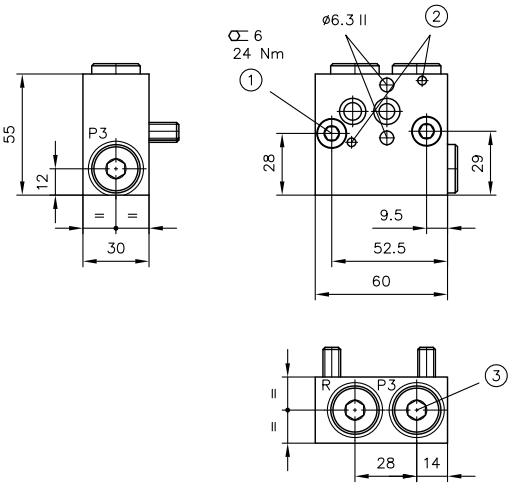

1 Cylinder screw ISO 4762-M8x35-8.8-A2K
2 Centring pin
3 w/o tapped plug on type U 4

Coding **U 5, U 5X**

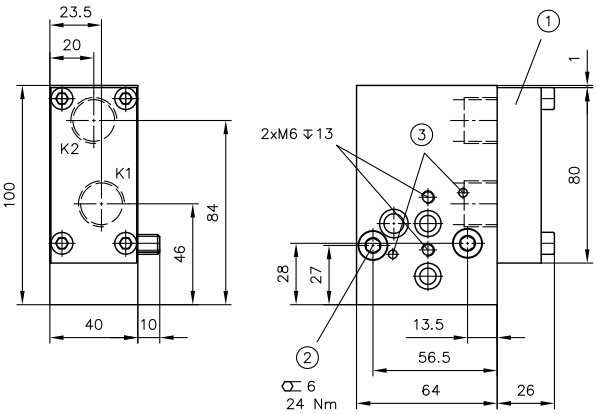

1 Not for type U 5X
2 Cylinder screw ISO 4762-M8x45-8.8-A2K
3 Centring pin

Coding	Ports (ISO 228-1)	
	P3, R	K1, K2
U 4, U 4X	G 3/8	--
U 5, U 5X	--	G 1/2

4.8 Piping connection block C 36

Coding **C 36**

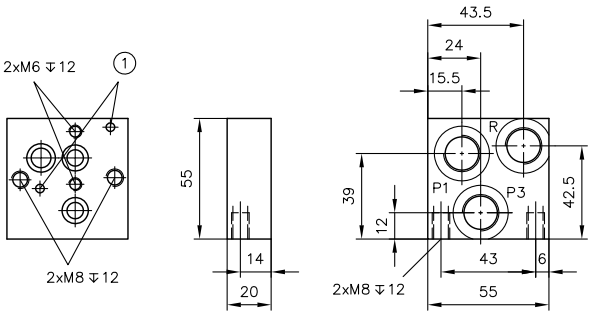

1 Centring pin

	Ports (ISO 228-1)
P1, P3, R	G 3/8

 © HAWE Hydraulik SE

5 Assembly, operation and maintenance recommendations

5.1 Intended use

These products are intended exclusively for use in hydraulic applications (fluid technology).

The user must observe the safety measures and warnings in this documentation.

Essential requirements for the product to function correctly and safely:

- All information in this documentation must be observed. This applies in particular to all safety measures and warnings.
- The product must only be assembled and put into operation by qualified personnel.
- The product must only be operated within the specified technical parameters. The technical parameters are described in detail in this documentation.
- All components must be suitable for the operating conditions in the event of application in an assembly.
- The operating and maintenance manual of the components, assemblies and the specific complete system must also always be observed.

If the product can no longer be operated safely:

1. Remove the product from operation and mark it accordingly.

✓ It is then not permitted to continue using or operating the product.

5.2 Assembly information

The product must only be installed in the complete system with standard and compliant connection components (screw fittings, hoses, pipes, fixtures etc.).

The product must be shut down correctly prior to dismounting (in particular in combination with hydraulic accumulators).

⚠ **DANGER**

Risk to life caused by sudden movement of the hydraulic drives when dismantled incorrectly!

Risk of serious injury or death.

- Depressurise the hydraulic system.
- Perform safety measures in preparation for maintenance.

5.3 Operating instructions

Note product configuration and pressure / flow rate

The statements and technical parameters in this documentation must be strictly observed.
The instructions for the complete technical system must also always be followed.

NOTE

- Read the documentation carefully before usage.
- The documentation must be accessible to the operating and maintenance staff at all times.
- Keep documentation up to date after every addition or update.

Purity and filtering of the hydraulic fluid

Fine contamination can significantly impair the function of the hydraulic component. Contamination can cause irreparable damage.

Examples of fine contamination include:

- Metal chips
- Rubber particles from hoses and seals
- Dirt due to assembly and maintenance
- Mechanical debris
- Chemical ageing of the hydraulic fluid

NOTE
New hydraulic fluid from the manufacturer does not necessarily have the required level of purity.
The hydraulic fluid must be filtered during filling.

Pay attention to the cleanliness level of the hydraulic fluid to maintain faultless operation.
(Also see cleanliness level in Chapter 3, "Parameters").

Additionally applicable document: D 5488/1 Oil recommendations

5.4 Maintenance information

Conduct a visual inspection at regular intervals, but at least once per year, to check if the hydraulic connections are damaged. If external leakages are found, shut down and repair the system.

Clean the device surface of dust deposits and dirt at regular intervals, but at least once per year.

 © HAWE Hydraulik SE

6 Other information

Further contamination control option

In addition to the options for contamination control via the pressure switches for return line filters ("Table 4"), all connection blocks AN with return line filters have two ports R1 and R2, through which a commercially available differential pressure indicator or switch can be connected externally, permitting continuous contamination monitoring. Differential pressure switches are part of the delivery range of most well-known filter manufacturers.

The flow resistance of the filter when new will be in the range of approx. 0.2 to 0.3 bar. The bypass check valve opens at a differential pressure of approx. 2.5 bar.

Critical contamination should therefore be indicated at $\Delta p \approx 2$ bar at the latest.

Example: Differential pressure switch (maintenance indicator) with optical and electrical signalling (here normally open contact)

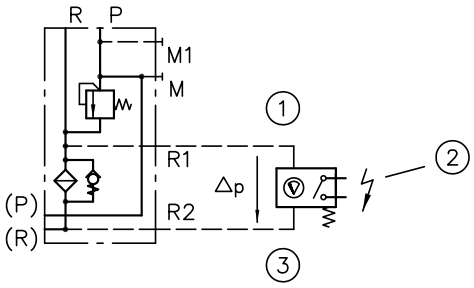

1 Contamination side
2 The switching capacity can vary greatly depending on the manufacturer; the applicable information from the manufacturer should therefore be observed.
3 Clean side

6.1 Accessories, spare parts and separate components

Filter elements

Coding	Order coding
Return line filter	
F0	W77/2
F1	6905 117 F1
F2	6905 117 F2
F3	6905 117 F3
Return stop	
R	6905 050a
R1	6905 050b

© HAWE Hydraulik SE

ZERTIFIKAT ◆ CERTIFICATE ◆ 認証証書 ◆ СЕРТИФИКАТ ◆ CERTIFICADO ◆ CERTIFICAT

TÜV SÜD Industrie Service

ZERTIFIKAT

Die Notifizierte Stelle nach Druckgeräterichtlinie
- Zertifizierungsstelle für Qualitätssicherungssysteme -
Der TÜV SÜD Industrie Service GmbH

bescheinigt, dass das Unternehmen

HAWE Hydraulik SE
Einsteinring 17
85609 Aschheim / München, Deutschland

mit dem Werk
83679 Sachsenkam, Tegernseer Weg 5

für den Geltungsbereich

Fertigung von direkt wirkenden, federbelasteten Sicherheitsventilen für Hydraulikflüssigkeiten

nach EU-Baumusterprüfungen (Baumuster), gemäß Anlage

ein Qualitätssicherungssystem nach der Druckgeräterichtlinie 2014/68/EU Anhang III, Modul D eingeführt hat und anwendet.

Durch ein Audit, Bericht -Nr.: Q-IS-ESP1-MUC-PED-56793-083-19, wurde der Nachweis erbracht, dass die betreffenden Anforderungen erfüllt sind.

Der Hersteller ist berechtigt, die im Rahmen des Geltungsbereiches dieses Qualitätssicherungssystems hergestellten Druckgeräte bei der Kennzeichnung mit unserer Kenn-Nummer wie dargestellt zu versehen:

CE 0036

Zertifikat- Nr. DGR-0036-QS-843-19
gültig bis 11. August 2022
unter der Voraussetzung von bestandenen jährlichen Überwachungsaudits

Filderstadt, 05. Juni 2019

TÜV SÜD Industrie Service GmbH
Westendstraße 199
80686 München
Germany

Martina John
Notified Body No.: 0036

Tel.: +49 711 70 05 289
Fax: +49 711 70 05 582
e-mail: martina.john@tuev-sued.de

TÜV®

TÜV SÜD Industrie Service GmbH · DGR-QS-Zertifizierungsstelle · Germany

ZERTIFIKAT ◆ CERTIFICATE ◆ 認証証書 ◆ СЕРТИФИКАТ ◆ CERTIFICADO ◆ CERTIFICAT

Industrie Service

ZERTIFIKAT

gültig bis: 13.03.2028

CERTIFICATE

valid until: 13.03.2028

EU-Baumusterprüfung (Modul B) - Baumuster - nach Richtlinie 2014/68/EU

EU Type examination (module B)- production type - according to Directive 2014/68/EU

Zertifikat-Nr.: **Z-IS-AN1-MAN-18-03-2831115-14172942**
Certificate No.:

Name und Anschrift des Herstellers: **HAWE Hydraulik SE**
Name and address of manufacturer: **Einsteinring 17**
85609 Aschheim

Hiermit wird bescheinigt, dass das unten genannte Baumuster die Anforderungen der Richtlinie 2014/68/EU erfüllt.

We herewith certify that the type mentioned below meets the requirements of the Directive 2014/68/EU.

CE 0036

Prüfbericht Nr.: **P-IS-AN1-MAN-18-03-2831115-14172942**
Evaluation report No.:

Geltungsbereich: **Sicherheitsventile des Typs MVEX4**
Scope of examination: **Druckbereich H - B,**
Einstelldruck 80 - 450 bar

Fertigungsstätte: **HAWE Hydraulik SE**
Manufacturing plant: **Tegernseer Weg 5**
83679 Sachsenkam

Mannheim, 16.03.2018
(Ort, Datum)
(Place, date)

TÜV SÜD Industrie Service GmbH 00 36 Notifizierte Stelle

TÜV SÜD Industrie Service GmbH
Zertifizierungsstelle für Druckgeräte

Dipl.-Ing. Brinkmann

Echtheitsprüfung durch App TÜV SÜD Verify
Verification of Certificate by TÜV SÜD App Verify

+49 621 395-367

Notifizierte Stelle, Kennnummer 0036
Notified Body, No. 0036
TÜV SÜD Industrie Service GmbH
Westendstr. 199
80686 München
GERMANY

Seite 1 zum Zertifikat Nr. / Page 1 of the certificate No. Z-IS-AN1-MAN-18-03-2831115-14172942

© HAWE Hydraulik SE

TÜV NORD

ZERTIFIKAT
CERTIFICATE

EU-Baumusterprüfbescheinigung(Baumuster)
nach Richtlinie 2014/68/EU
EU type-examination (production type)
according to directive 2014/68/EU

Zertifikat-Nr.: **07/202/1042/Z/0463/13/D Rev. 01**
Certificate No.:

Name und Anschrift des Herstellers: **HAWE Hydraulik SE**
Name and address of manufacturer: **Einsteinring 17**
85609 Aschheim

Hiermit wird bescheinigt, dass das unten genannte Baumuster die Anforderungen der Richtlinie 2014/68/EU erfüllt.
We hereby certify that the type examination mentioned below fulfills the requirements of directive 2014/68/EU.

Geprüft nach Richtlinie 2014/68/EU Tested according to directive 2014/68/EU	**Modul B, AD 2000** **Module B, AD 2000**
Prüfbericht-Nr.: Test report No.:	**1042 P 0463/13/D**
Beschreibung des Baumusters (Druckgerät): Description of production type (pressure equipment):	**Sicherheitsventil** direkt wirkend, federbelastet Typ CMVX 2 in Nenngröße 4 (Einschraubventil) für Hydraulikflüssigkeiten gemäß Herstellerangabe Einstelldrücke zwischen 20 und 500 bar Temperaturen zwischen -20°C und 80 °C
Fertigungsstätte Place of manufacture:	**HAWE Hydraulik SE** **Tegernseer Weg 5** **83679 Sachsenkam**
Gültig bis: Valid until:	**01.10.2022**

Anlagen:
Attachment

Notifizierte Stelle 0045 für Druckgeräte
Notified Body 0045 for pressure equipment
Hannover, 13.03.2013 überarbeitet am 02.08.2019

notified body TÜV NORD 0045 TÜV NORD Systems

Dipl.-Ing. R. Wiedemann
TÜV NORD Systems GmbH & Co. KG, Große Bahnstraße 31, 22525 Hamburg

Mitglied der Member of CEOC
CONFÉDÉRATION EUROPÉENNE D'ORGANISMES DE CONTRÔLE

OE: Fertigungstechnik
AM Tüv 1
30519 Hannover
Tel. +49-(0) 511 998-61671
Fax +49-(0) 511 998-61632
e-mail IMHannover@tuev-nord.de

B Druckgerät und Baugruppe deu eng digital Rev. 1/09.18

BA 51 05.07 gbe

Further information

Additional versions

- Pressure-limiting valve, with unit approval type CMVX: D 7710 TUV
- Pressure-limiting valve, with unit approval type MV .X: D 7000 TUV
- Connection blocks type B for hydraulic power packs: D 6905 B
- Connection block type C 5 and C 6: D 6905 C
- Compact hydraulic power pack type MP: D 7200 H
- Compact hydraulic power pack type MPN and MPNW: D 7207
- Compact hydraulic power pack type HK 3: D 7600-3
- Compact hydraulic power pack type HKL and HKLW: D 7600-3L
- Compact hydraulic power pack type HK 4: D 7600-4
- Compact hydraulic power pack type HC and HCW: D 7900
- Compact hydraulic power pack type KA and KAW size 2: D 8010
- Compact hydraulic power packs type KA and KAW size 4: D 8010-4

Mountable valve banks:

- Valve bank (directional seated valve) type VB: D 7302
- Valve bank (directional seated valve) type BWN and BWH: D 7470 B/1
- Valve bank (directional seated valve) type BVH: D 7788 BV
- Valve bank (nominal size 6) type BA: D 7788

D 6905 A/2 - 12-2020-1.0

HAWE Hydraulik SE
Einsteinring 17 | 85609 Aschheim/Munich | Postfach 11 55 | 85605 Aschheim | Germany
Tel +49 89 379100-1000 | Fax +49 89 379100-91000 | info@hawe.de | www.hawe.com